ISO 9001
KS A 9001

Lloyd's Register
LIFE MATTERS

TUV CERT
CE 0036

U&S

TOTAL GAS ENGINEERING

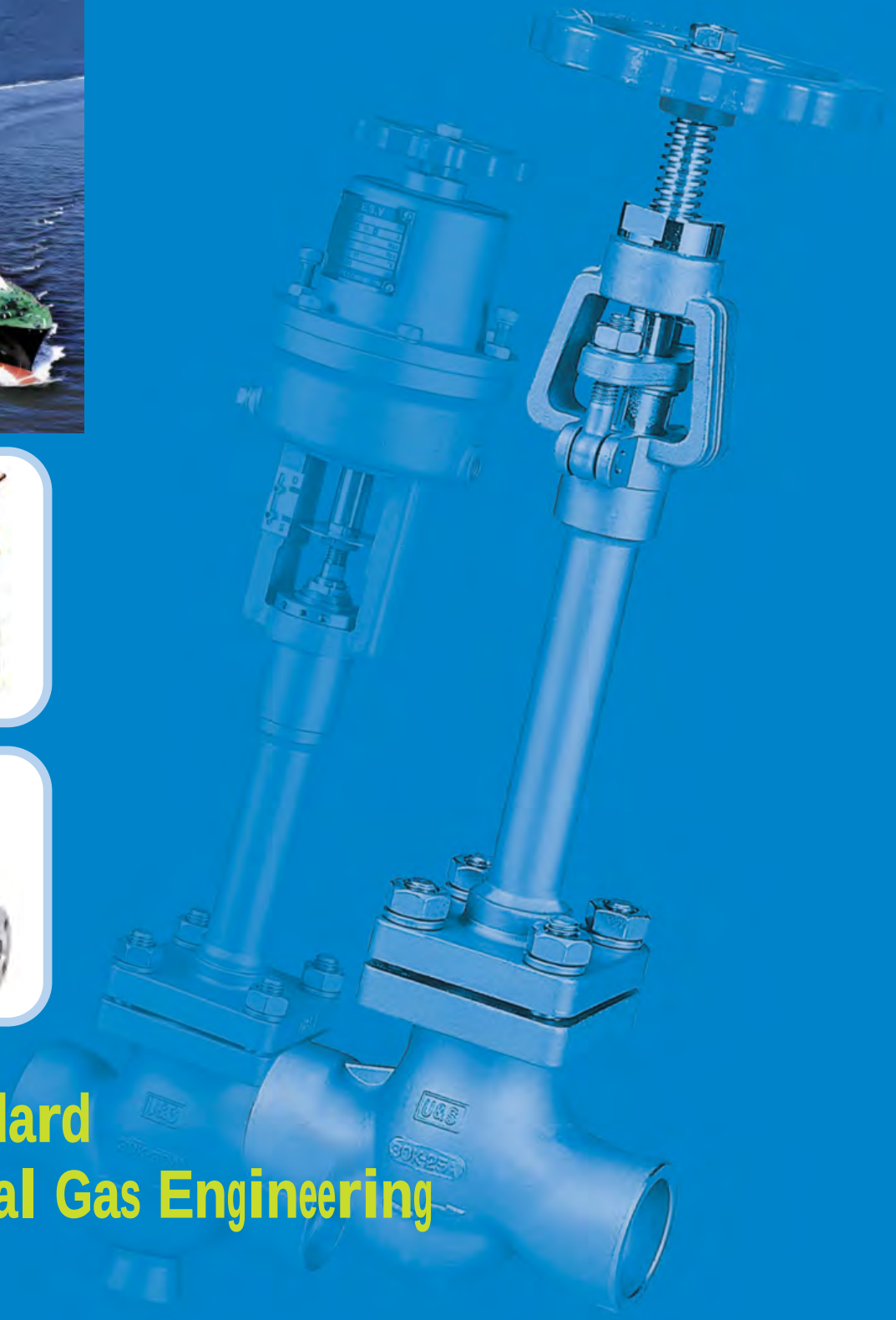

World Standard
Total Gas Engineering

Introduction

성실, 최선, 책임을 다하는 가스산업분야의 최고 전문기업!

(주)유엔에스는 1997년에 창업한 이래 "정성스럽고 참되고 거짓이 없는 誠實, 가장 좋고 훌륭한 最善, 철저하고 완벽하게 행하는 責任을 사훈으로, 국가기반 산업인 가스산업용 초저온밸브, 가스믹서기, 기화기, 가스설비 엔지니어링 분야의 최고 전문기업으로 성장하였습니다.

21세기 고객의 시대, 변화의 시대, 경쟁의 시대를 맞이하여 가스 산업 분야의 경험, 완벽한 기술과 숙련된 Know-How를 토대로 고객행복, 경영혁신, 경쟁력확보를 경영목표로 국가발전과 세계시장에 도전하여 미래를 창조하고 세계인의 번영에 이바지하는 세계 초일류 기업이 되는 것이 (주)유엔에스 가족의 희망입니다.

코스닥 등록을 목표로 도전적이며 미래지향적인 사업구조 구축을 위해 기술개발에 사운을 걸고 가스산업용 신제품 개발에 사업 역량을 결집하고 있는 우수한 중소기업입니다. 지금까지 주력해 오던 가스산업용 기기분야에서 내수시장 기반을 확고하게 구축하였고, 세계시장 공략을 위한 신제품출시, 미국, 유럽, 동남아 등 해외시장에 적극적인 마케팅 활동을 통해 국제적인 지명도를 얻고 있으며, 세계시장에 본격적인 수출과 시장확대로 사업확장에 필요한 투자 재원 및 대외 인지도를 확보하게 될 것입니다. 향후 내실있는 성장성과 수익성을 겸비한 대표적 중견기업으로 성장할 수 있도록 많은 성원과 격려를 부탁드립니다.

We U&S Gas Co.,Ltd. was founded in 1997 and since our foundation, we keep our promise "Precious Service, Perfect and Precise products, Performed with responsibility". We've grown as the best expert maker of Cryogenic valve for Gas industry, Gas Mixer, Vaporizer, Engineering of Gas Industry Facilities.

Our employee take aim at gratification of customer, management reform, strengthen the competitiveness as working principles and they are dedicated to challenge the world market base on expert know-how and technology.

We put our best efforts at technical development and focus on developing new product to register KOSDAQ.

We have not only firm domestic market of Gas industry facilities but also gained a good credibility from our overseas agents such as Europe, U.S, and the Southeast Asia. Throughout, beyond our company's market will expand worldwide by increased exports through widening our international market our company will secure fresh investment and international recognition.

For any company to grow as a leader in its market, substantial growth and profit must be packaged together as one. We believe we are such a company. We look forward to your encouragement and support.

U&S CO., LTD.

U&S History
_회사연혁

_1996. 7. 서진가스 ENG, 유니텍 설립
9. 특정설비 제조업(기화장치)개시
_1999. 12. 서진가스 ENG, 유니텍 통합
(주)유엔에스 설립 (자본금 5천만원)
_2000. 4. 녹산공장 신축이전
5. 무역업 등록
9. 전문건설업 면허 - 가스시공업 등록
12. 고압가스용 조립식 기화기 개발
(의장등록 제0280360호, 실용신안등록 제0290376호)
_2001. 2. 증기식 대용량기확기 개발
4. 자본금 증자 (자본금 2억원정)
12. 자본금 증자 (자본금 4억원)
_2002. 6. GAS MIXER(가스혼합기) 국산화성공
12. 고압가스용 COMBINATION REGULATOR 개발
_2003. 2. 공장증축(밸브공장 신축)
7. 특정설비제조 등록 (초저온 저장 용기 종목 추가)
8. 고압가스 자동 절체기 개발
_2004. 6. KGSC/ISO 9001 인증 획득
8. JIA/ISO 9001 인증획득
_2005. 7. 액화가스용 배관용 밸브, 초저온 용기용 밸브 종목추가
10. 자본금 증자 (자본금 10억원정)
_2006. 4. 2공장 등록 (열교환기 제작 공장)
4. 초저온밸브 CE인증 획득
8. 기술혁신형중소기업 (INNO-BIZ) 확인서
_2007. 8. 벤처기업 확인서 (KIBO 기술보증 기금)
9. Lloyd 인증 획득
11. 자본금 증자 (자본금 12.5억원정)
_2008. 1. 3공장 등록 (CE 탱크 제작 공장)

_1996. 7. Established Seojin Eng, Unitech each
9. Started production of specific equipment (vaporizing system)
_1999. 12. Unification of Seojin Gas Eng and Unitech
Established U & S Co., Ltd.
(Capital. ₩50,000,000)
_2000. 4. Built new factory in Noksan and moved to Noksan
5. Registered Trading Business
9. Achieved Licence for Professional Construction (Registered Gas Construction - first class)
12. Developed Vaporizer (assembly type for high pressure gas), (Design Register No. 0280360, Utility Model Register No. 0290376)
_2001. 2. Developed Steam Heater Type Vaporizer
4. Increased Capital ₩200,000,000
12. Increased Capital ₩400,000,000
_2002. 6. Developed GAS MIXER
12. Developed COMBINATION REGULATOR for high pressure
_2003. 2. Built Valve Factory in Nok San
7. Registered Production of Specific Equipment (add Cryogenic Storage Tank)
8. Register High Pressure Automatic Cutting Machine
_2004. 6. Achieved ISO 9001 from KGSC
8. Achieved ISO 9001 from JIA
_2005. 7. Start to produce LPG Valve and Cryogenic Cylinder Valve
10. Extended Capital ($ 1,000,000)
_2006. 4. Factory Registration - Heat Exchanger Manufacture Factory
4. Achieved approval of CE certificate for cryogenic globe valve
8. INNO-BIZ Confirmation
_2007. 8. Venture Business Confirmation
9. Achieved approval of Lloyd certificate for cryogenic ball valve
11. Extended Capital ($ 1,250,000)
_2008. 1. Factory Registration - CE Tank Manufacture Factory

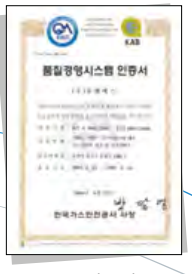
ISO인증서

CE인증서

Lloyd's 인증서

FIRE TEST 인증서

ASME 인증서

INNO-BIZ 확인서

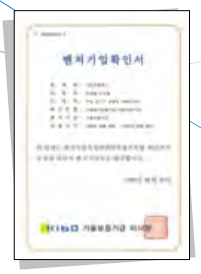
벤처기업확인서

연구소인증서

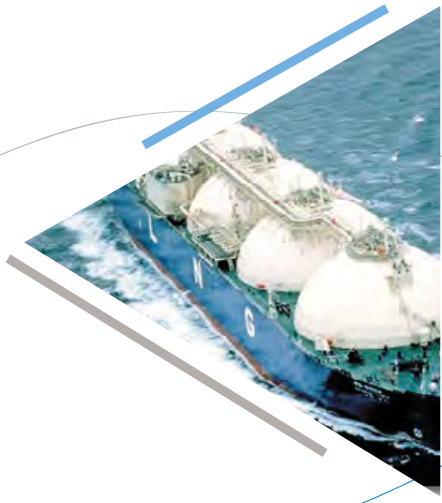

Valve Department
__밸브 사업부

〉〉 제1공장 밸브 사업부

- **초저온용 밸브** – Cryogenic Valve
- **초저온용 긴급차단 밸브** – Cryogenic Emergency shut – off Valve
- **초저온용 콘트롤 밸브** – Cryogenic Control Valve
- **초저온용 조정기** – Cryogenic Regulator / Economizer
- **콤비네이션 조정기 / 이코노마이즈** – Cryogenic Combination Regulator / Economizer
- **LPG 밸브** – LPG Valve
- **LPG 긴급차단 밸브** – LPG Emergency shut – off Valve
- **LPG 선박용 밸브** – LPGC Valve
- **LNG 선박용 밸브** – LNGC Valve

설계
Design

가공
Processing

용접
Welding

검사
Inspection

조립
Assembling

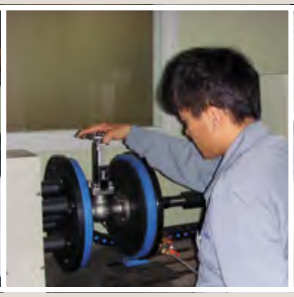

기밀검사
Leakage Test

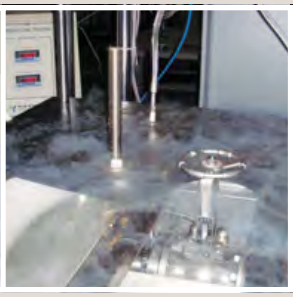

초저온 검사
Cryogenic Test

작동 검사
Operating Test

Design Verification

3D-Design

3D-Modeling

3D-Mesh

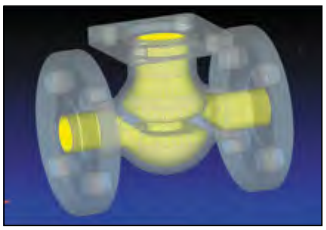

3D-Analysys

Thermal Deformation Interpretation

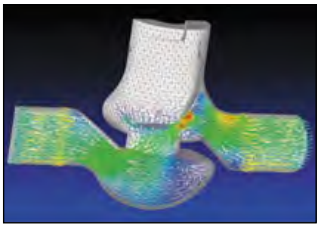

Fluidal Interpretation

Quality Verification

Tentative.Measurement Room

3D-Meters

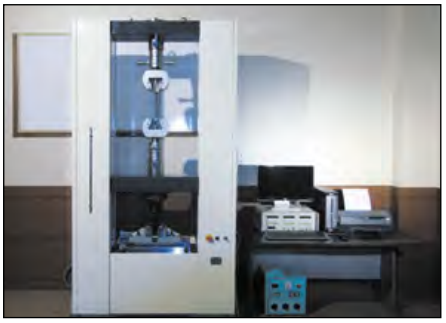

Universal Test Equipment

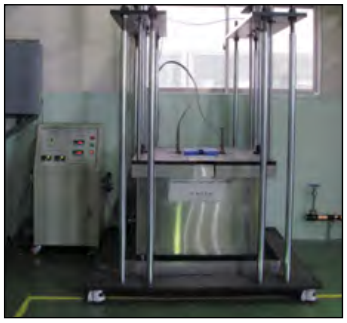

Cryogenic Test Equipment

Hydraulic Test Equipment

Leak Test Equipment

Factory System
Products

밸브제품소개

_해상용

LNGC BALL VALVE ····· 10
LNGC GLOBE VALVE ····· 12
LPGC BALL VALVE ····· 13

_STS

CRYOGENIC VALVE ····· 15
E.S.V ····· 16
CONTROL VALVE ····· 17
CHECK VALVE ····· 18
DIVERT VALVE ····· 18
REGULATOR ····· 19

_BC

CRYOGENIC VALVE ····· 22
CHECK VALVE ····· 26
GAUGE VALVE ····· 26
REGULATOR ····· 27
DIVERT VALVE ····· 27
COMBINATION REGULATOR ····· 28
STRAINER ····· 29
STOP VALVE ····· 29
COMBINATION ECONOMIZER ····· 30
EXTENDED STEM CRYOGENIC VALVE ····· 30

_기타

VACUUM VALVE ····· 31
AUTO CHANGER ····· 31

_육상 LPG용

GLOBE VALVE ····· 32
STRAINER ····· 33
CHECK VALVE ····· 34
E.S.V ····· 35

Figure Number Coding

Coding and Ordering Information

MODEL : U&S – C S L – SW 25 – 30

PART
C – CRYOGENIC VALVE
R – REGULATOR
E – ECONOMIZER
V – VALVE
A – AUTO CHANGER
S – SAFETY VALVE
CE – EXTENDED CRYOGENIC V/V (FOR LGC & SMALL TANK)
L – LPG
N – LNG
MN – MARINE LNG
MP – MARINE LPG

MATERIAL
B – BRASS
S – STS
A – AL
G – GCD(DUCTILE IRON)
C – CARBON STEEL

TYPE
S – SHORT GLOBE VALVE
L – LONG GLOBE VALVE
H – HIGH PRESSURE(HIGHER THAN 20㎏/㎠)
M – MIDDLE PRESSURE(LOWER THAN 20㎏/㎠)
G – 3-WAY-GAUGE
D – 3-WAY-DIVERT
C – CHECK VALVE (LIFT)
I – CHECK VALVE (INLINE)
W – CHECK VALVE (SWING)
T – STRAINER
E – EMERGENCY SHUT-OFF VALVE
V – VACUUM VALVE
O – CONTROL VALVE
X – EXCESS FLOW VALVE
BB – BOLTED BONNET

CONNECTION
S – SCREW
F – FLANGE
BW – BUTT WELDING
SW – SOCKET WELDING
UW – UNION WELDING

SIZE
8 – 8A(1/4")
10 – 10A(3/8")
15 – 15A(1/2")
20 – 20A(3/4")
25 – 25A(1")
40 – 40A(1-1/2")
50 – 50A(2")

RATING
10 – 10K
20 – 20K
30 – 30K
150 – 150LB
300 – 300LB
600 – 600LB
900 – 900LB
1200 – 1200LB
1500 – 1500LB

MARINE LNG STS TOP ENTRY BALL VALVE
Model : U&S-MNSB(小)

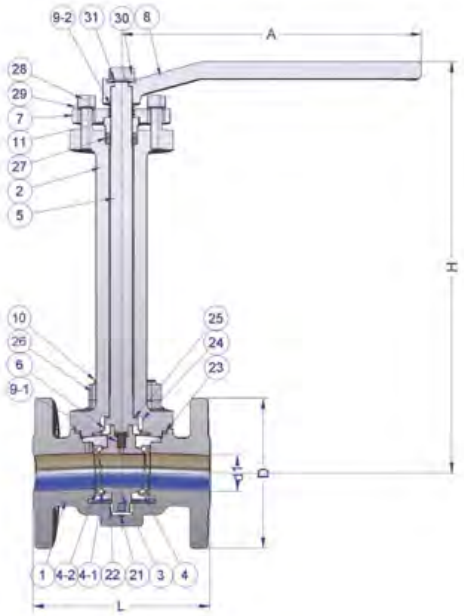

MATERIAL

NO	PART NAME	MATERIAL
1	BODY	CF8M
2	BONNET	CF8M
3	BALL	STS 316
4	SEAT RING	STS 316
4-1	PACKING	PCTFE
4-2	PACKING	GRAPHITE
5	STEM	STS 316
6	BALL SLEEVE	STS 316
7	FLANGE GLAND	CF8M
8	HANDLE	CF8M
9-1	SPRING	STS 316
9-2	SPRING	STS 316
10	STUD BOLT	STS 316

NO	PART NAME	MATERIAL
11	GLAND	STS 316
21	BALL PACKING	PTFE
22	LOWER BEARING	PCTFE
23	BONNET GASKET	GRAPHITE
24	UPPER BEARING	PCTFE
25	STEM BEARING	GRAPHITE
26	LOCK NUT	STS 316
27	STEM PACKING	GRAPHTIE
28	WRENCH BOLT	STS 316
29	LOCK WASHER	STS 316
30	NUT	STS 316
31	SPRING WASHER	STS 316

DIMENSION

SIZE	L	d1	D	H	A
15A	108	15	89	266.7	215
25A	127	25	108	293.7	215

SPECIFICATION

- Hydrostatic test pressure : 225LB
- Pneumatic test pressure : 165LB
- Fluid : LNG, LIN, LOX, LAr
- Fire safety design
- Anti-static device
- Design Pressure : 150LB
- Design Temperature : -196℃ ~ +80℃
- Design Code : BS 5351, BS6364, API 6D, API 607
- Cryogenic test

MARINE LNG STS TOP ENTRY BALL VALVE
Model : U&S-MNSB(大)

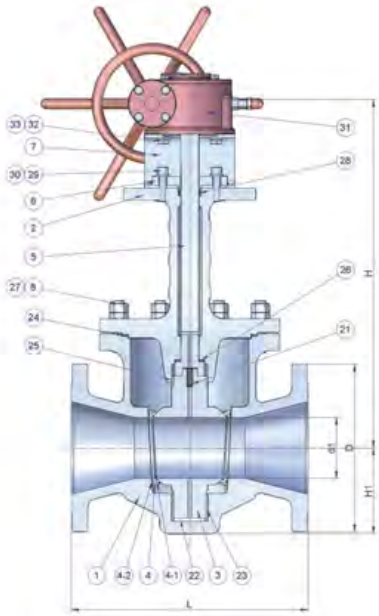

MATERIAL

NO	PART NAME	MATERIAL
1	BODY	CF8M
2	BONNET	CF8M
3	BALL	STS 316
4	SEAT RING	STS 316
4-1	PACKING	PCTFE
4-2	PACKING	GRAPHITE
5	STEM	STS 316
6	FLANGE GLAND	STS 316
7	BRACKET	STS 316
8	STUD BOLT	STS 316
21	SPRING	STS 316
22	BALL PACKING	PTFE

NO	PART NAME	MATERIAL
23	LOWER BEARING	PCTFE
24	BONNET GASKET	GRAPHITE
25	UPPER BEARING	PCTFE
26	STEM BEARING	GRAPHITE
27	LOCK NUT	STS 316
28	STEM PACKING	GRAPHITE
29	WRENCH BOLT	STS 316
30	LOCK WASHER	STS 316
31	GEAR BOX	A536 외
32	HEX BOLT	STS 316
33	SPRING WASHER	STS 316

DIMENSION

SIZE	L	d1	D	H1	H
80A	283	76	191	82	405
150A	394	101.6	279.5	143	575.3
200A	457	152	343	185	618

SPECIFICATION

- Hydrostatic test pressure : 225LB
- Pneumatic test pressure : 165LB
- Fluid : LNG, LIN, LOX, LAr
- Fire safety design
- Anti-static device
- Design Pressure : 150LB
- Design Temperature : -196℃ ~ +80℃
- Design Code : BS 5351, BS6364, API 6D, API 607
- Cryogenic test

MARINE LNG STS GLOBE TYPE NEEDLE VALVE
Model : U&S-MNSG

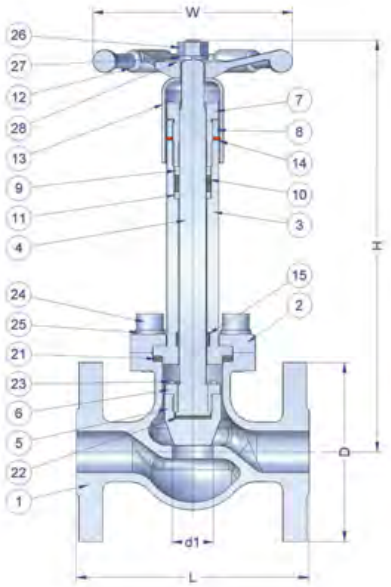

MATERIAL

NO	PART NAME	MATERIAL
1	BODY	CF8M
2	BONNET FLANGE	CF8M
3	EXTENDED BONNET	CF8M
4	STEM	STS 316
5	DISC	STS 316
6	STEM LOCK NUT	STS 316
7	GLAND	STS 316
8	GLAND LOCK NUT	STS 316
9	SLEEVE	STS 316
10	PACKING	GRAPHITE
11	FLAT WASHER	STS 316
12	HAND WHEEL	CF8M

NO	PART NAME	MATERIAL
13	POSITION INDICATOR CAP	STS 316
14	POSITION INDICATOR	MC NYLON
15	PACKING	PTFE
21	PACKING	GRAPHITE
22	PACKING	GRAPHITE
23	STOP RING	STS 316
24	WRENCH BOLT	STS 316
25	SPRING WASHER	STS 316
26	HEX NUT	STS 316
27	SPRING WASHER	STS 316
28	NAME PLATE	STS 316

DIMENSION

SIZE	L	d1	D	H	W
15A	115	15	88.9	208	100
25A	140	25	108	258	120
32A	165	32	117	268	120

SPECIFICATION

- Hydrostatic test pressure : 225LB
- Pneumatic test pressure : 165LB
- Fluid : LNG
- Fire safety design
- Design Pressure : 150LB
- Design Temperature : −196℃ ~ +80℃
- Design Code : BS6364, API 6D, API 6FA
- Cryogenic test

MARINE LPG STS SIDE ENTRY 2 PIECE BALL VALVE
Model : U&S-MPSB

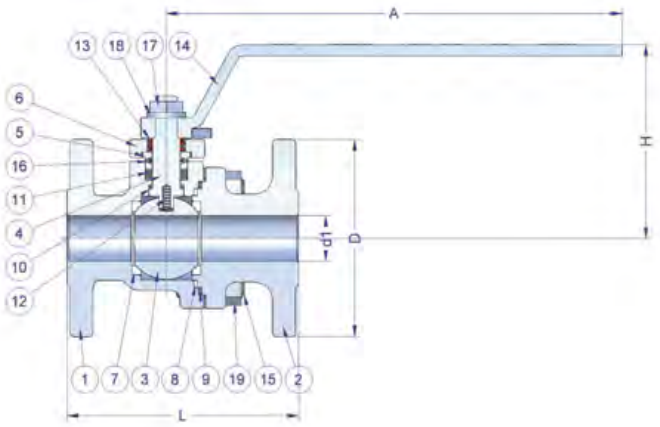

MATERIAL

NO	PART NAME	MATERIAL
1	BODY	CF8M
2	COVER	CF8M
3	BALL	STS 316
4	STEM	STS 316
5	GLAND	STS 316
6	FLANGE GLAND	STS 316
7	BALL PACKING	PTFE
8	PACKING	PTFE
9	PACKING	GRAHPITE
10	STEM BEARING	PTFE

NO	PART NAME	MATERIAL
11	STEM PACKING	GRAHPITE
12	SPRING	STS 316
13	SPRING	STS 316
14	HANDLE	CF8M
15	STUD BOLT	STS 316
16	O-RING	VITON
17	NUT(3종)	STS 316
18	SPRING WASHER	STS 316
19	NUT	STS 316

DIMENSION (150LB)

SIZE	L	d1	D	H	A
25A	127	25	108	106	250
40A	165	38	127	118.5	280
50A	178	50	152	126.5	280
80A	203	80	191	164	320

DIMENSION (300LB)

SIZE	L	d1	D	H	A
25A	165	25	124	106	250
40A	190	38	156	118.5	280
50A	216	50	165	126.5	280
80A	283	80	210	164	320

SPECIFICATION

- Hydrostatic test pressure : 225LB
- Pneumatic test pressure : 165LB
- Design Pressure : 150LB
- Design Temperature : -50℃ ~ +100℃
- Fluid : LPG
- Design Code : BS5351, API 6D, API 607
- Fire safety design
- Anti-static device

SPECIFICATION

- Hydrostatic test pressure : 450LB
- Pneumatic test pressure : 330LB
- Design Pressure : 300LB
- Design Temperature : -50℃ ~ +100℃
- Fluid : LPG
- Design Code : BS5351, API 6D, API 607
- Fire safety design
- Anti-static device

CRYOGENIC STS LONG-STEM VALVE
Model : U&S-CSL-SW

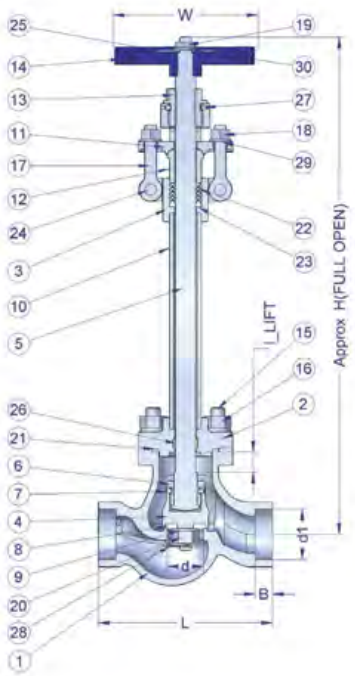

MATERIAL

NO	PART NAME	MATERIAL
1	BODY	SSC 13
2	BONNET	SSC 13
3	YOKE	SSC 13
4	DISC	STS 304
5	STEM	STS 304
6	DISC STEM NUT	STS 304
7	LOCK BOLT	STS 304
8	DISC SOFT SEAT	PCTFE
9	SEAT WASHER	STS 304
10	EXTENDED PIPE	STS 304 TP
11	GLAND FLANGE	SSC 13
12	GLAND	STS 304
13	YOKE BUSH	C3771
14	HANDWHEEL	ALDC8
15	BONNET BOLT	STS 304

NO	PART NAME	MATERIAL
16	BONNET BOLT NUT	STS 304
17	GLAND BOLT	STS 304
18	GLAND BOLT NUT	STS 304
19	HANDWHEEL NUT	STS 304
20	HEXAGON NUT	STS 304
21	GASKET	V#7020
22	PACKING	PTFE
23	ADAPTER	PTFE
24	PIN	STS 304
25	NAME PLATE	A1100P
26	BUSH	PTFE
27	LOCK BOLT	STS 304
28	SPLIT PIN	STS 304
29	SPRING WASHER	STS 304
30	SPRING WASHER	STS 304

DIMENSION

SIZE	d	d1	L	B	l	H	W	MASS(kg)
15A	15	22	90	9	12	352	100	2.3
20A	20	28	100	10	12	359	100	2.6
25A	25	35	120	10	12	361	100	3.0
40A	40	49	150	12.5	16	431	140	7.2
50A	50	61	180	14.5	18	470	140	8.8
65A	65	B.W	216	17	28	590	200	14.0
80A	80	B.W	241	21	32	630	200	20.0
100A	100	B.W	292	24	38	740	250	35.0

SPECIFICATION

- Hydrostatic test pressure : 45kg/㎠ (30kg/㎠ ~ 60kg/㎠)
- Pneumatic test pressure : 33kg/㎠ (22kg/㎠ ~ 44kg/㎠)
- Fluid : Liquid, Gas O_2, N_2, Ar, CO_2, LNG, C_2H_4
- Design Pressure : 30kg/㎠ (20kg/㎠ ~ 40kg/㎠)
- Design Temperature : −196℃ ~ +60℃

CRYOGENIC STS SHORT-STEM VALVE
Model : U&S-CSS-SW

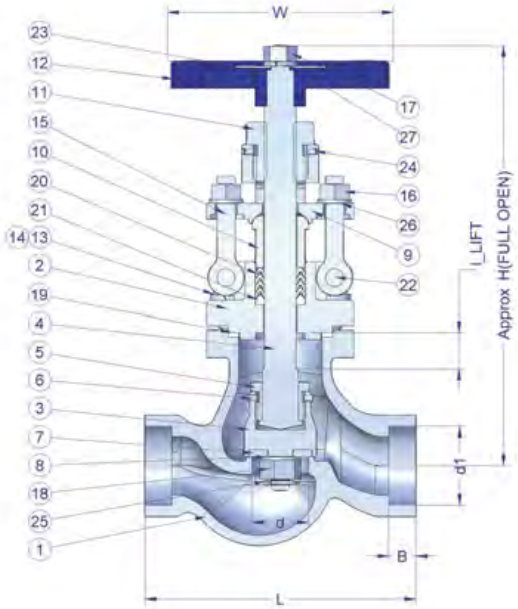

MATERIAL

NO	PART NAME	MATERIAL
1	BODY	SSC 13
2	BONNET	SSC 13
3	DISC	STS 304
4	STEM	STS 304
5	DISC STEM NUT	STS 304
6	LOCK BOLT	STS 304
7	DISC SOFT SEAT	PCTFE
8	SEAT WASHER	STS 304
9	GLAND FLANGE	SSC 13
10	GLAND	STS 304
11	YOKE BUSH	C3771
12	HANDWHEEL	ALDC8
13	BONNET BOLT	STS 304
14	BONNET BOLT NUT	STS 304

NO	PART NAME	MATERIAL
15	GLAND BOLT	STS 304
16	GLAND BOLT NUT	STS 304
17	HANDWHEEL NUT	STS 304
18	HEXAGON NUT	STS 304
19	GASKET	V#7020
20	PACKING	PTFE
21	ADAPTER	PTFE
22	PIN	STS 304
23	NAME PLATE	A1100P
24	LOCK BOLT	STS 304
25	SPLIT PIN	STS 304
26	SPRING WASHER	STS 304
27	SPRING WASHER	STS 304

DIMENSION

SIZE	d	d1	L	B	l	H	W	MASS(kg)
15A	15	22	90	9	12	193	100	2.0
20A	20	28	100	10	12	200	100	2.3
25A	25	35	120	10	12	202	100	2.7
40A	40	49	150	12.5	16	252	140	6.2
50A	50	61	180	14.5	18	268	140	7.7
65A	65	B.W	216	17	25	310	200	12.2
80A	80	B.W	241	21	32	340	200	17.5
100A	100	B.W	292	24	38	388	250	30.0

SPECIFICATION

- Hydrostatic test pressure : 45kg/㎠ (30kg/㎠ ~ 60kg/㎠)
- Pneumatic test pressure : 33kg/㎠ (22kg/㎠ ~ 44kg/㎠)
- Fluid : Gas O_2, N_2, Ar, CO_2, NG, C_2H_4
- Design Pressure : 30kg/㎠ (20kg/㎠ ~ 40kg/㎠)
- Design Temperature : −40℃ ~ +60℃

CRYOGENIC STS LONG-STEM VALVE
Model : U&S-CSL-F(Flange)

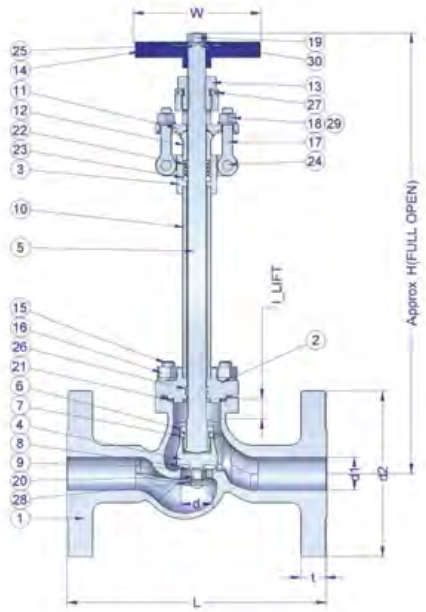

MATERIAL

NO	PART NAME	MATERIAL
1	BODY	SSC 13
2	BONNET	SSC 13
3	YOKE	SSC 13
4	DISC	STS 304
5	STEM	STS 304
6	DISC STEM NUT	STS 304
7	LOCK BOLT	STS 304
8	DISC SOFT SEAT	PCTFE
9	SEAT WASHER	STS 304
10	EXTENDED PIPE	STS 304 TP
11	GLAND FLANGE	SSC 13
12	GLAND	STS 304
13	YOKE BUSH	C3771
14	HANDWHEEL	ALDC8
15	BONNET BOLT	STS 304

NO	PART NAME	MATERIAL
16	BONNET BOLT NUT	STS 304
17	GLAND BOLT	STS 304
18	GLAND BOLT NUT	STS 304
19	HANDWHEEL NUT	STS 304
20	HEXAGON NUT	STS 304
21	GASKET	V#7020
22	PACKING	PTFE
23	ADAPTER	PTFE
24	PIN	STS 304
25	NAME PLATE	A1100P
26	BUSH	PTFE
27	LOCK BOLT	STS 304
28	SPLIT PIN	STS 304
29	SPRING WASHER	STS 304
30	SPRING WASHER	STS 304

DIMENSION

SIZE	d	d1	L	d2	t	l	H	W
15A	15	15	152	95	12	12	352	100
20A	20	20	178	100	14	12	359	100
25A	25	25	203	125	14	12	361	100
40A	40	40	229	140	16	16	431	140
50A	50	50	267	155	16	18	470	140
65A	65	65	292	175	18	22	590	200
80A	80	80	318	185	18	25	710	200
100A	100	100	356	210	18	35	820	250
125A	125	125	400	250	20	42	950	250
150A	150	150	444	280	22	50	1100	250

SPECIFICATION

- Hydrostatic test pressure : 45kg/㎠ (30kg/㎠ ~ 60kg/㎠)
- Pneumatic test pressure : 33kg/㎠ (22kg/㎠ ~ 44kg/㎠)
- Fluid : Liquid, Gas O_2, N_2, Ar, CO_2, LNG, C_2H_4
- Design Pressure : 30kg/㎠ (20kg/㎠ ~ 40kg/㎠)
- Design Temperature : -196℃ ~ +60℃

※For the flange type, detail specification should be advised on purchase order.

CRYOGENIC STS SHORT-STEM VALVE
Model : U&S-CSS-F(Flange)

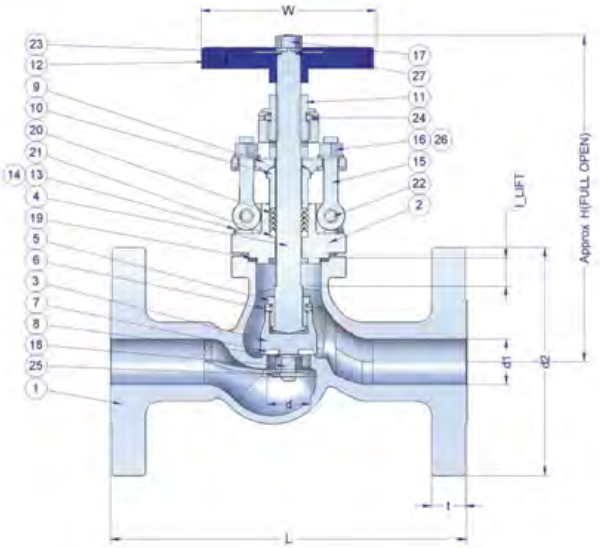

MATERIAL

NO	PART NAME	MATERIAL
1	BODY	SSC 13
2	BONNET	SSC 13
3	DISC	STS 304
4	STEM	STS 304
5	DISC STEM NUT	STS 304
6	LOCK BOLT	STS 304
7	DISC SOFT SEAT	PCTFE
8	SEAT WASHER	STS 304
9	GLAND FLANGE	SSC 13
10	GLAND	STS 304
11	YOKE BUSH	C3771
12	HANDWHEEL	ALDC8
13	BONNET BOLT	STS 304
14	BONNET BOLT NUT	STS 304

NO	PART NAME	MATERIAL
15	GLAND BOLT	STS 304
16	GLAND BOLT NUT	STS 304
17	HANDWHEEL NUT	STS 304
18	HEXAGON NUT	STS 304
19	GASKET	V#7020
20	PACKING	PTFE
21	ADAPTER	PTFE
22	PIN	STS 304
23	NAME PLATE	A1100P
24	LOCK BOLT	STS 304
25	SPLIT PIN	STS 304
26	SPRING WASHER	STS 304
27	SPRING WASHER	STS 304

DIMENSION

SIZE	d	d1	L	d2	t	l	H	W
15A	15	15	152	95	12	12	193	100
20A	20	20	178	100	14	12	200	100
25A	25	25	203	125	14	12	202	100
40A	40	40	229	140	16	16	252	140
50A	50	50	267	155	16	18	268	140
65A	65	65	292	175	18	25	310	200
80A	80	80	318	185	18	32	340	200
100A	100	100	356	210	18	38	388	250
125A	125	125	400	250	20	42	600	250
150A	150	150	444	280	22	50	725	250

SPECIFICATION

- Hydrostatic test pressure : 45kg/㎠ (30kg/㎠ ~ 60kg/㎠)
- Pneumatic test pressure : 33kg/㎠ (22kg/㎠ ~ 44kg/㎠)
- Fluid : Gas O_2, N_2, Ar, CO_2, NG, C_2H_4
- Design Pressure : 30kg/㎠ (20kg/㎠ ~ 40kg/㎠)
- Design Temperature : -40℃ ~ +60℃

※For the flange type, detail specification should be advised on purchase order.

CRYOGENIC STS EMERGENCY SHUT-OFF VALVE
Model : U&S-CSE(E.S.V)-SW

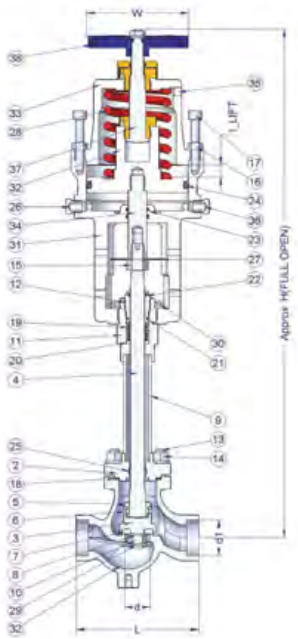

MATERIAL

NO	PART NAME	MATERIAL
1	BODY	SSC 13
2	BONNET	SSC 13
3	DISC	STS 304
4	STEM	STS 304
5	DISC STEM NUT	STS 304
6	LOCK BOLT	STS 304
7	DISC SOFT SEAT	PCTFE
8	SEAT WASHER	STS 304 TP
9	EXTENDED PIPE	STS 304
10	HEXAGON NUT	STS 304
11	STUFFING BOX	STS 304
12	GLAND	STS 304
13	BONNET BOLT	STS 304
14	BONNET BOLT NUT	STS 304
15	HEXAGON NUT	STS 304
16	HEXAGON NUT	STS 304
17	WRENCH BOLT	STS 304
18	GASKET	V#7020
19	PACKING(D)	PTFE

NO	PART NAME	MATERIAL
20	ADAPTER	PTFE
21	O-RING	VITON
22	O-RING	VITON
23	O-RING	N B R
24	O-RING	N B R
25	BUSH	PTFE
26	PLUG	C3604
27	INDICATOR PLATE	STS 304
28	SPRING	SUP 10
29	SPLIT PIN	STS 304
30	ADAPTER	STS 304
31	CYLINDER	AC3A-F
32	PISTON	C3771
33	CYLINDER COVER	AC3A-F
34	PISTON ROD	STS 304
35	EXHAUST PLUG	C3604
36	FUSE METAL	FAI0092
37	STAM	STS 304
38	HANDWHEEL	OPTION

DIMENSION

SIZE	d	d1	L	l	H		W
					LIQUDE	GAS	
15A	15	22	90	11	560	455	100
20A	20	28	100	11	560	455	100
25A	25	35	120	12	570	465	100
40A	40	49	150	16	645	500	140
50A	50	61	180	18	765	515	140
65A	65	B.W	216	28	815	535	200
80A	80	B.W	241	32	1000	760	200
100A	100	B.W	292	38	1180	900	250

SPECIFICATION

- Hydrostatic test pressure : 45kg/㎠ (30kg/㎠)
- Pneumatic test pressure : 33kg/㎠ (22kg/㎠)
- Fluid : Liquid, Gas O_2, N_2, Ar, CO_2, LNG, C_2H_4
- Design Pressure : 30kg/㎠ (20kg/㎠)
- Design Temperature : -196℃ ~ +60℃

※For the flange type, detail specification should be advised on purchase order.
※Emergency Shut off Valve for CO_2 Gas is different in some part, to be produced with CO_2 Short Stem.

CRYOGENIC STS CONTROL VALVE
Model : U&S-CSO-SW

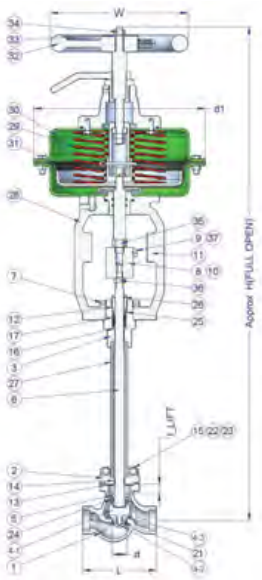

MATERIAL

NO	PART NAME	MATERIAL
1	BODY	SSC 13
2	BONNET FLANGE	SSC 13
3	EXTENDED BONNET	STS 304
4-1	DISC	STS 304
4-2	COVER	STS 304
4-3	SEAT	PCTFE
5	DISC STEM NUT	STS 304
6	STEM	STS 304
7	ADAPTER	STS 304
8	CONNECTOR	S45C
9	INDICATOR	STS 304
10	GUIDE	STS 304
11	INDICATOR PLATE	STS 304
12	GLAND	STS 304
13	GASKET	#7020
14	PACKING	PTFE
15	STUD BOLT	STS 304
16	PACKING ADATOR	PTFE

NO	PART NAME	MATERIAL
17	U-PACKING	PTFE
21	SET SCREW	STS 304
22	SPRING WASHER	STS 304
23	HEX NUT	STS 304
24	SET SCREW	STS 304
25	O-RING	VITON
26	O-RING	VITON
27	EXTENDED PIPE	STS 304
28	YOKE	FCD450
29	SPRING	SUP-9
30	DIAPHRAGM CASING	SS41
31	DIAPHRAGM	NBR
32	HAND WHEEL	AL
33	SPRING WASHER	STS 304
34	HEX NUT	STS 304
35	HEX NUT	STS 304
36	HEX NUT	STS 304
37	HEX NUT	STS 304

DIMENSION

SIZE	d	d1	L	l	H		W
					LIQUDE	GAS	
15A	15	275	90(S.W)	15	785	573	160
20A	20	275	100(S.W)	15	820	580	160
25A	25	275	120(S.W)	15	820	582	160
40A	40	275	150(S.W)	20	840	600	160
50A	50	355	180(S.W)	25	985	690	200
65A	65	355	216(S.W)	30	985	710	200
80A	80	355	241(S.W)	35	1055	732	200
100A	100	465	292(S.W)	45	1315	870	200
125A	125	465	385(F/L)	55	1430	940	200
150A	150	465	385(F/L)	70	1450	1000	200
200A	200	520	395(F/L)	90	1550	1100	280

SPECIFICATION

- Hydrostatic test pressure : 45kg/㎠ (30kg/㎠)
- Pneumatic test pressure : 33kg/㎠ (22kg/㎠)
- Fluid : Gas, Air, Steam
- Design Pressure : 30kg/㎠ (20kg/㎠)
- Design Temperature : -196℃ ~ +60℃

※Some items can be made according to th customer's specification.

CRYOGENIC STS CHECK VALVE
Model : U&S-CSC-SW

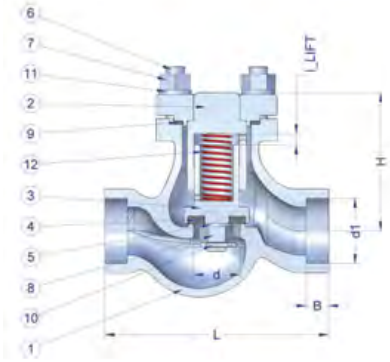

MATERIAL

NO	PART NAME	MATERIAL
1	BODY	SSC 13
2	BONNET	SSC 13
3	DISC	STS 304
4	DISC SOFT SEAT	PCTFE
5	SEAT WASHER	STS 304
6	BONNET BOLT	STS 304
7	BONNET BOLT NUT	STS 304
8	HEXAGON NUT	STS 304
9	GASKET	V#7020
10	SPLIT PIN	STS 304
11	GUIDE	STS 304
12	SPRING	STS 304

DIMENSION

SIZE	d	d1	L	B	I	H
15A	15	22	90	9	11	70
20A	20	28	100	10	11	75
25A	25	35	120	10	12	78
40A	40	49	150	12.5	16	102
50A	50	61	180	14.5	18	110
65A	65	B.W	216	17	28	115
80A	80	B.W	241	21	32	132
100A	100	B.W	292	24	38	161

SPECIFICATION

- Hydrostatic test pressure : 45kg/㎠
- Pneumatic test pressure : 33kg/㎠
- Design Pressure : 30kg/㎠
- Design Temperature : −196℃ ~ +60℃
- Fluid : Liquid, Gas O_2, N_2, Ar, CO_2, LNG, C_2H_4

※For the flange type, detail specification should be advised on purchase order.

CRYOGENIC STS 3-WAY DIVERT VALVE
Model : U&S-CSD-S

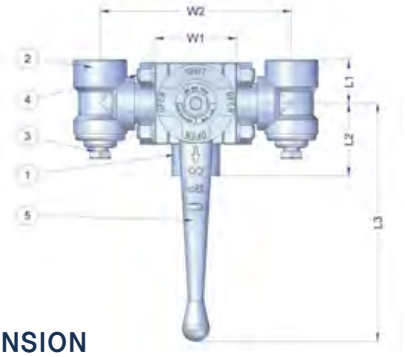

MATERIAL

NO	PART NAME	MATERIAL
1	BODY	STS 304
2	SIDE BODY	STS 304
3	PLUG NIPPLE	OPTION
4	FIXED BOLT	STS 304
5	HANDLE	ALDC 8

DIMENSION

SIZE	L1	L2	L3	W1	W2	Connector
15A	39	52	174	64	166	1/2 "
20A	39	52	174	64	166	3/4 "
25A	39	52	174	64	166	1 "
40A	87.5	88.5	262	103	290	1 1/2 "
50A	87.5	88.5	262	103	290	2 "

SPECIFICATION

- Hydrostatic test pressure : 45kg/㎠
- Pneumatic test pressure : 33kg/㎠
- Fluid : Liquid, Gas O_2, N_2, Ar, CO_2, LNG, C_2H_4
- Design Pressure : 30kg/㎠
- Design Temperature : −196℃ ~ +60℃

CRYOGENIC STS REGULATOR
Model : U&S-RSM-S

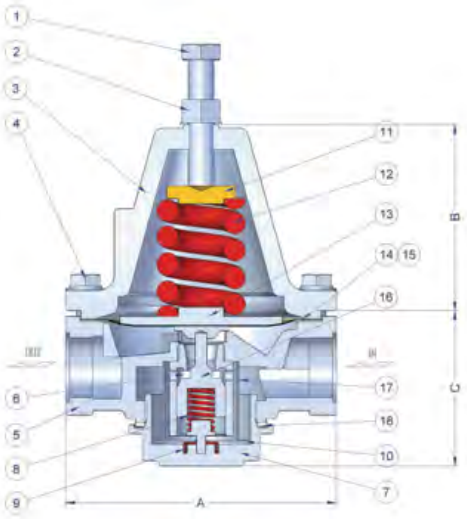

MATERIAL

NO	PART NAME	MATERIAL
1	ADJUST SCREW	STS 304
2	LOCK NUT	STS 304
3	BONNET	SSC 13
4	BOLT / NUT	STS 304
5	BODY	SSC 13
6	DISC PACKING	PCTFE
7	CAPSULE	STS 304
8	SMALL SPRING	STS 304
9	SPRING	STS 304

NO	PART NAME	MATERIAL
10	DISC PLANE	STS 304
11	SPRING CUP	C3771
12	WORK SPRING	STS 304
13	DIAPHRAGM SHEET	C3771
14	DIAPHRAGM	STS 3116
15	DIAPHRAGM PACKING	T#1901
16	ORIFICE DISC	STS 304
17	FILTER	STS 304
18	PACKING	PTFE + CU

DIMENSION

SIZE	A	B	C	Connector
15A	119	83	78	PT 1/2 "
25A	149	110	83	PT 1 "

SPECIFICATION

- Delivery Pressure Range : From : 25 To : 250psi
- Maximum Initial Pressure : 480psi
- Fluid : Liquid, Gas O_2, N_2, Ar, CO_2, LNG, C_2H_4
- Design Pressure : 30kg/㎠
- Design Temperature : −196℃ ~ +60℃

CRYOGENIC BC LONG-STEM VALVE
Model : U&S-CBL-SW

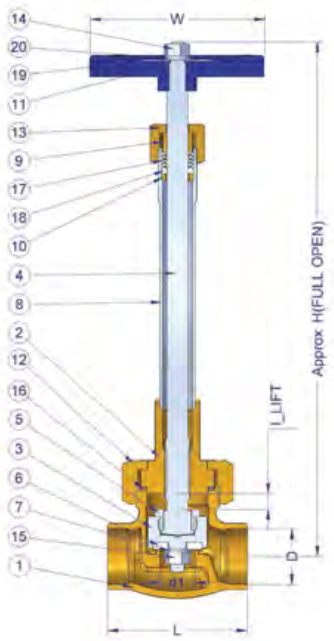

MATERIAL

NO	PART NAME	MATERIAL
1	BODY	BC 7
2	BONNET	BC 6
3	DISC	C 3604
4	STEM	STS 304
5	DISC STEM NUT	C3604
6	SOFT SEAT	PCTFE
7	SEAT WASHER	STS 304
8	EXTENDED PIPE	STS 304 TP
9	GLAND	C3604
10	PACKING RING	C3604

NO	PART NAME	MATERIAL
11	HANDWHEEL	ALDC8
12	UNION NUT	BC 6
13	GLAND NUT	C3604
14	HANDWHEEL NUT	STS 304
15	HEXAGON NUT	STS 304
16	GASKET	V#7020
17	PACKING	PTFE
18	ADAPTER	PTFE
19	NAME PLATE	A1100P
20	SPRING WASHER	STS 304

DIMENSION

SIZE	d1	L	D	I	H	W
8A	13	65	14	8	195	65
10A	13	65	17.5	8	195	65
15A	15	65	22	9	230	80
20A	20	80	27.5	10	298	100
25A	25	80	34.5	11	300	100
40A	40	120	49	18	360	140
50A	50	140	61	21	400	140

SPECIFICATION

- Hydrostatic test pressure : 45kg/㎠ (30kg/㎠)
- Pneumatic test pressure : 33kg/㎠ (22kg/㎠)
- Fluid : Liquid, Gas O_2, N_2, Ar, CO_2
- Design Pressure : 30kg/㎠ (20kg/㎠)
- Design Temperature : −196℃ ~ +60℃

※For screw type, 15A, 20A, 25A only can be produced.
※For pipe welding type, length should be advised on the pruchase order.

CRYOGENIC BC SHORT-STEM VALVE
Model : U&S-CBS-SW

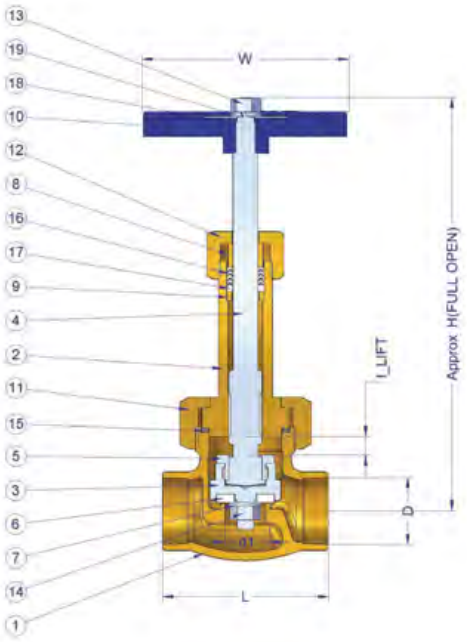

MATERIAL

NO	PART NAME	MATERIAL
1	BODY	BC 7
2	BONNET	BC 6
3	DISC	C 3604
4	STEM	STS 304
5	DISC STEM NUT	C3604
6	SOFT SEAT	PCTFE
7	SEAT WASHER	STS 304
8	GLAND	C3604
9	PACKING RING	C3604
10	HANDWHEEL	ALDC8

NO	PART NAME	MATERIAL
11	UNION NUT	BC 6
12	GLAND NUT	C3604
13	HANDWHEEL NUT	STS 304
14	HEXAGON NUT	STS 304
15	GASKET	V#7020
16	PACKING	PTFE
17	ADAPTER	PTFE
18	NAME PLATE	A1100P
19	SPRING WASHER	STS 304

DIMENSION

SIZE	d1	L	D	I	H	W
8A	13	65	14.0	8	130	65
10A	13	65	17.5	8	130	65
15A	15	65	22.0	9	170	80
20A	20	80	27.5	10	190	100
25A	25	80	34.5	11	200	100
40A	40	120	49.0	18	255	140
50A	50	140	61.0	21	260	140

SPECIFICATION

- Hydrostatic test pressure : 45kg/㎠ (30kg/㎠)
- Pneumatic test pressure : 33kg/㎠ (22kg/㎠)
- Fluid : Gas O_2, N_2, Ar, CO_2
- Design Pressure : 30kg/㎠ (20kg/㎠)
- Design Temperature : -40℃ ~ +60℃

※For screw type, 15A, 20A, 25A only can be produced.
※For pipe welding type, length should be advised on the pruchase order.

CRYOGENIC BC LONG-STEM VALVE
Model : U&S-CBL-S

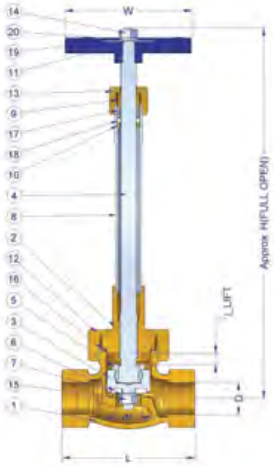

MATERIAL

NO	PART NAME	MATERIAL	NO	PART NAME	MATERIAL
1	BODY	BC 7	11	HANDWHEEL	ALDC8
2	BONNET	BC 6	12	UNION NUT	BC 6
3	DISC	C 3604	13	GLAND NUT	C3604
4	STEM	STS 304	14	HANDWHEEL NUT	STS 304
5	DISC STEM NUT	C3604	15	HEXAGON NUT	STS 304
6	SOFT SEAT	PCTFE	16	GASKET	V#7020
7	SEAT WASHER	STS 304	17	PACKING	PTFE
8	EXTENDED PIPE	STS 304 TP	18	ADAPTER	PTFE
9	GLAND	C3604	19	NAME PLATE	A1100P
10	PACKING RING	C3604	20	SPRING WASHER	STS 304

※For screw type, 15A, 20A, 25A only can be produced.
※For pipe welding type, length should be advised on the pruchase order.

DIMENSION

SIZE	d1	L	D	l	H	W
15A	15	88	PT 1/2"	9	230	80
20A	20	105	PT 3/4"	10	298	100
25A	25	110	PT 1"	11	300	100

SPECIFICATION

- Hydrostatic test pressure : 45kg/㎠ (30kg/㎠)
- Design Pressure : 30kg/㎠ (20kg/㎠)
- Pneumatic test pressure : 33kg/㎠ (22kg/㎠)
- Design Temperature : −196℃ ~ +60℃
- Fluid : Liquid, Gas O_2, N_2, Ar, CO_2

CRYOGENIC BC SHORT-STEM VALVE
Model : U&S-CBS-S

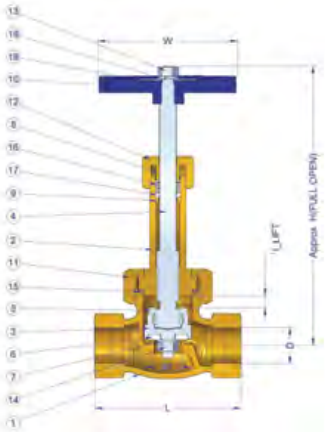

MATERIAL

NO	PART NAME	MATERIAL	NO	PART NAME	MATERIAL
1	BODY	BC 7	11	UNION NUT	BC 6
2	BONNET	BC 6	12	GLAND NUT	C3604
3	DISC	C 3604	13	HANDWHEEL NUT	STS 304
4	STEM	STS 304	14	HEXAGON NUT	STS 304
5	DISC STEM NUT	C3604	15	GASKET	V#7020
6	SOFT SEAT	PCTFE	16	PACKING	PTFE
7	SEAT WASHER	STS 304	17	ADAPTER	PTFE
8	GLAND	C3604	18	NAME PLATE	A1100P
9	PACKING RING	C3604	19	SPRING WASHER	STS 304
10	HANDWHEEL	ALDC8			

※For screw type, 15A, 20A, 25A only can be produced.
※For pipe welding type, length should be advised on the pruchase order.

DIMENSION

SIZE	d1	L	D	l	H	W
15A	15	88	PT 1/2"	9	170	80
20A	20	105	PT 3/4"	10	190	100
25A	25	110	PT 1"	11	200	100

SPECIFICATION

- Hydrostatic test pressure : 45kg/㎠ (30kg/㎠)
- Design Pressure : 30kg/㎠ (20kg/㎠)
- Pneumatic test pressure : 33kg/㎠ (22kg/㎠)
- Design Temperature : −40℃ ~ +60℃
- Fluid : Gas O_2, N_2, Ar, CO_2

CRYOGENIC BC LONG-STEM VALVE
Model : U&S-CBL(BB)-SW

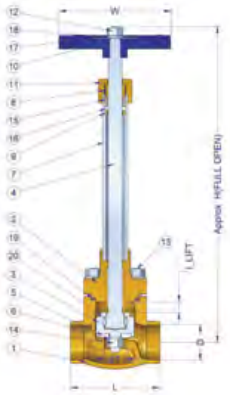

MATERIAL

NO	PART NAME	MATERIAL	NO	PART NAME	MATERIAL
1	BODY	BC 7	11	GLAND NUT	C3604
2	BONNET	BC 6	12	HANDWHEEL NUT	STS 304
3	DISC	C 3604	13	HEXAGON NUT	STS 304
4	STEM	STS 304	14	BOLT & NUT & S/W	STS 304
5	SOFT SEAT	PCTFE	15	PACKING	PTFE
6	SEAT WASHER	STS 304	16	ADAPTER	PTFE
7	EXTENDED PIPE	STS 304 TP	17	NAME PLATE	A1100P
8	GLAND	C3604	18	SPRING WASHER	STS 304
9	PACKING RING	C3604	19	GASKET	V#7020
10	HANDWHEEL	ALDC8	20	DISC STEM NUT	C3604

※For screw type, 15A, 20A, 25A only can be produced.
※For pipe welding type, length should be advised on the pruchase order.

DIMENSION

SIZE	d1	L	D	l	H	W
10A	13	65	17.5	8	195	65
15A	15	65	22	9	230	80
20A	22	80	27.5	10	298	100
25A	25	80	34.5	11	300	100
40A	40	120	49	19	360	140
50A	50	140	61	20	400	140

SPECIFICATION

- Hydrostatic test pressure : 45kg/㎠ (30kg/㎠)
- Design Pressure : 30kg/㎠ (20kg/㎠)
- Pneumatic test pressure : 33kg/㎠ (22kg/㎠)
- Design Temperature : −196℃ ~ +60℃
- Fluid : Liquid, Gas O_2, N_2, Ar, CO_2

CRYOGENIC BC SHORT -STEM VALVE
Model : U&S-CBS(BB)-SW

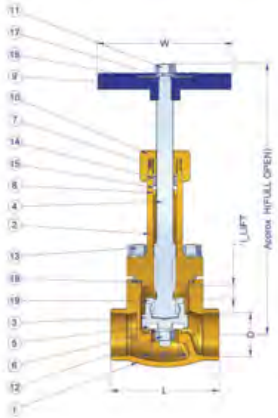

MATERIAL

NO	PART NAME	MATERIAL	NO	PART NAME	MATERIAL
1	BODY	BC7	11	HAND WHEEL NUT	STS304
2	BONNET	BC6	12	HEXAGON NUT	STS304
3	DISC	C 3604	13	BOLT & NUT & S/W	STS304
4	STEM	STS304	14	PACKING	PTFE
5	SOFT SEAT	PTFE	15	ADAPTER	PTFE
6	SEAT WASHER	STS304	16	NAME PLATE	A1100P
7	GLAND	C3604	17	SPRING WASHER	STS304
8	PACKING RING	C3604	18	GASKET	V#7020
9	HAND WHEEL	ALDC8	19	DISC STEM NUT	C3604
10	GLAND NUT	C3604			

※For screw type, 15A, 20A, 25A only can be produced.
※For pipe welding type, length should be advised on the pruchase order.

DIMENSION

SIZE	d1	L	D	l	H	W
10A	13	65	17.5	8	130	65
15A	15	65	22	9	170	80
20A	22	80	27.5	10	190	100
25A	25	80	34.5	11	200	100
40A	40	120	49	19	255	140
50A	50	140	61	20	260	140

SPECIFICATION

- Hydrostatic test pressure : 45kg/㎠ (30kg/㎠)
- Design Pressure : 30kg/㎠ (20kg/㎠)
- Pneumatic test pressure : 33kg/㎠ (22kg/㎠)
- Design Temperature : −40℃ ~ +60℃
- Fluid : Liquid, Gas O_2, N_2, Ar, CO_2

CRYOGENIC BC CHECK VALVE
Model : U&S-CBC-SW

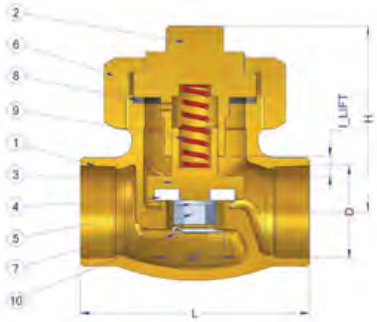

MATERIAL

NO	PART NAME	MATERIAL
1	BODY	BC 7
2	BONNET	BC 6
3	DISC	BC 6
4	SOFT SEAT	PCTFE
5	SEAT WASHER	STS 304
6	UNION NUT	BC 6
7	HEXGON NUT	STS 304
8	GASKET	V#7020
9	SPRING	STS 304
10	SPLIT PIN	STS 304

DIMENSION

SIZE	d	L	D	l	H
15A	15	65	22	7	50
20A	20	80	27.5	7	65
25A	25	80	34.5	7	65
40A	40	120	49	19	85
50A	50	140	61	20	90

SPECIFICATION

- Hydrostatic test pressure : 45kg/㎠
- Pneumatic test pressure : 33kg/㎠
- Fluid : Liquid, Gas O_2, N_2, Ar, CO_2
- Design Pressure : 30kg/㎠
- Design Temperature : −196℃ ~ +60℃

※For pipe welding type, length should be advised on the pruchase order.

CRYOGENIC BC GAUGE VALVE
Model : U&S-CBG-S

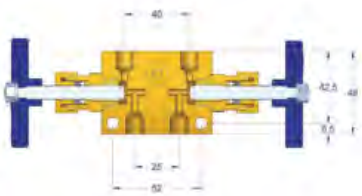

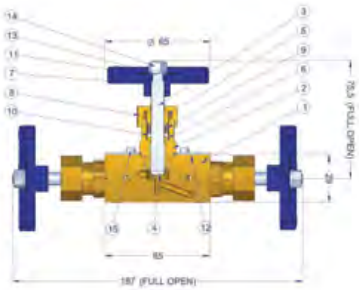

MATERIAL

NO	PART NAME	MATERIAL
1	BODY	BC 6
2	BONNET	BC 6
3	STEM	STS 304
4	SOFT SEAT	PCTFE
5	GLAND	C3604
6	PARKING RING	C3604
7	HANDWHEEL	ALDC 8
8	GLAND NUT	C3604

NO	PART NAME	MATERIAL
9	PARKING	PCTFE
10	ADAPTER	PCTFE
11	NAME PLATE	A1100 P
12	NAME PLATE	A1100 P
13	SPRING LOCK WASHER	STS 304
14	HANDWHEEL NUT	STS 304
15	WRENCH BOLT	STS 304

SPECIFICATION

- Hydrostatic test pressure : 45kg/㎠
- Pneumatic test pressure : 33kg/㎠
- Fluid : Liquid, Gas O_2, N_2, Ar, CO_2
- Design Pressure : 30kg/㎠
- Design Temperature : −196℃ ~ +60℃

CRYOGENIC BC REGULATOR
Model : U&S-RBM-S

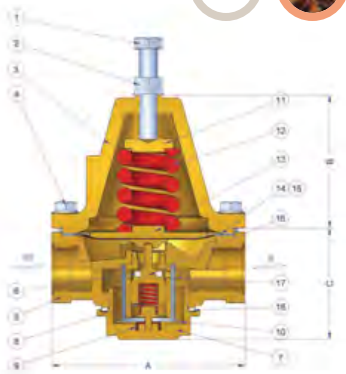

MATERIAL

NO	PART NAME	MATERIAL
1	ADJUST SCREW	STS 304
2	LOCK NUT	STS 304
3	BONNET	BC 6
4	BOLT/NUT	STS 304
5	BODY	BC 6
6	DISC PACKING	PCTFE
7	CAPSULE	BC 6
8	SMALL SPRING	STS 304
9	SPRING	STS 304

NO	PART NAME	MATERIAL
10	DISC PLANE	STS 304
11	SPRING CUP	C3771
12	WORK SPRING	STS 304
13	DIAPHRAGM SHEET	C3771
14	DIAPHRAGM	CU, STS
15	DIAPHRAGM PACKING	T#1901
16	ORIFICE DISC	C3771
17	FILTER	STS 304
18	PACKING	PTFE + CU

DIMENSION

SIZE	A	B	C	Connector
15A	119	83	78	PT 1/2 "
20A	133	83	78	PT 3/4 "
25A	149	110	83	PT 1 "
40A	236	231	117	PT 1 $\frac{1}{2}$ "

SPECIFICATION

- Delivery Middle Pressure Range : Fron:25 To:250psi
- Delivery High Pressure Range : Fron:150 To:380psi
- Maximum Initial Pressure : 400psi
- Fluid : Liquid, Gas O_2, N_2, Ar, CO_2
- Design Pressure : 30kg/㎠
- Design Temperature : −196℃ ~ +60℃

CRYOGENIC BC 3-WAY DIVERT VALVE
Model : U&S-CBD-S

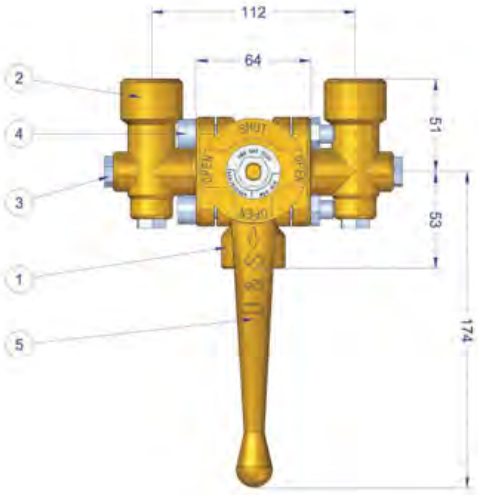

MATERIAL

NO	PART NAME	MATERIAL
1	BODY	BC 6
2	SIDE BODY	BC 6
3	PLUG NIPPLE	BRASS
4	FIXED BOLT	STS 304
5	HANDLE	BC 6

SPECIFICATION

- Hydrostatic test pressure : 45kg/㎠
- Pneumatic test pressure : 33kg/㎠
- Fluid : Liquid, Gas O_2, N_2, Ar, CO_2
- Design Pressure : 30kg/㎠
- Design Temperature : −196℃ ~ +60℃

※Production size : 15A, 20A

CRYOGENIC BC COMBINATION REGULATOR
Model : U&S-REBH-BW

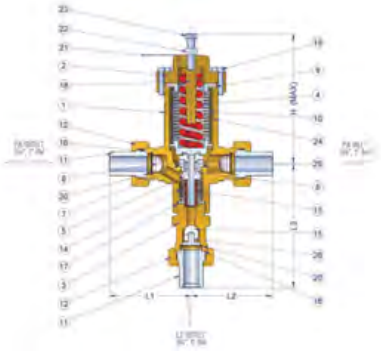

MATERIAL

NO	PART NAME	MATERIAL
1	BODY	C3771
2	BONNET	C3771
3	CAPSULE SLEEVE	C3771
4	WORK SPRING	STS 304
5	ORIFICE DISC	STS 304
6	SOFT SEAT	PCTFE
7	ORIFICE GUIDE	STS 304
8	FILTER	STS 304
9	BELLOWS GASKET	V#7020
10	BELLOWS	STS 316
11	JOINT	STS 304
12	JOINT NUT	C3771
13	SMALL SPRING	STS 304

NO	PART NAME	MATERIAL
14	SMALL BELLOWS	STS 316
15	CHECK BALL	STS 304
16	GASKET	V#7020
17	GASKET	V#7020
18	SPRING RETAINER	C3771
19	BONNET BOLT	STS 304
20	RING	STS 304
21	NAME PLATE	STS 304
22	LOCK NUT	STS 304
23	ADJUST SCREW	STS 304
24	BELLOWS CASE	STS 304
25	GASKET	V#7020
26	CHECK BALL GUIDE	C 3604

DIMENSION

SIZE	L1	L2	L3	H	CONNECTOR
20A	94	94	144	160	3/4 " BW
25A	98	98	148	162	1 " BW

SPECIFICATION

- Delivery Pressure Range : From:50 To:500psi
- Design Pressure : 40kg/㎠ • Maximum Initial Pressure : 500psi
- Design Temperature : −196℃ ~ +40℃
- Fluid : LN_2, LO_2, LAR, LCO_2

CRYOGENIC BC REGULATOR / ECONOMIZER
Model : U&S-RBH-BW

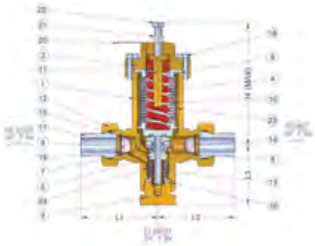

MATERIAL

NO	PART NAME	MATERIAL
1	BODY	C3771
2	BONNET	C3771
3	CAPSULE SLEEVE	C3771
4	WORK SPRING	STS 304
5	ORIFICE DISC	STS 304
6	SOFT SEAT	PCTFE
7	ORIFICE GUIDE	STS 304
8	FILTER	STS 304
9	BELLOWS GASKET	V#7020
10	BELLOWS	STS 316
11	JOINT	STS 304
12	JOINT NUT	C3771

NO	PART NAME	MATERIAL
13	SMALL BELLOWS	STS 316
14	GASKET	V#7020
15	GASKET	V#7020
16	GASKET	V#7020
17	SPRING RETAINER	C3771
18	BONNET BOLT	STS 304
19	RING	STS 304
20	NAME PLATE	STS 304
21	LOCK NUT	STS 304
22	ADJUST SCREW	STS 304
23	BELLOWS CASE	STS 304
24	SMALL BEUOWS	STS 304

DIMENSION

SIZE	L1	L2	L3	H	CONNECTOR
20A	94	94	78	160	3/4 " BW
25A	98	98	78	162	1 " BW

SPECIFICATION

- Delivery Pressure Range : From:50 To:500psi
- Design Pressure : 40kg/㎠ • Maximum Initial Pressure : 500psi
- Design Temperature : −196℃ ~ +40℃
- Fluid : LN_2, LO_2, LAR, LCO_2

CRYOGENIC BC STRAINER
Model : U&S-CBT-SW

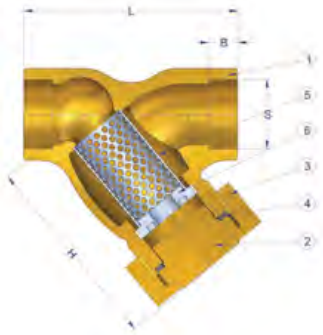

MATERIAL

NO	PART NAME	MATERIAL
1	BODY	BC 6
2	BONNET	C3604
3	UNION NUT	BC 6

NO	PART NAME	MATERIAL
4	GASKET	V#7020
5	SCREEN	STS 304
6	ADAPTER	STS 304

DIMENSION

SIZE	L	S	B	H
20A	90	27.5	14	95
25A	104	34.5	14	110

SPECIFICATION

- Hydrostatic test pressure : 45kg/㎠
- Pneumatic test pressure : 33kg/㎠
- Fluid : Liquid, Gas O_2, N_2, Ar, CO_2
- Design Pressure : 30kg/㎠
- Design Temperature : −196℃ ~ +60℃

HIGH PRESSURE STOP VALVE
Model : U&S-VBH(250F / 250C)-BW

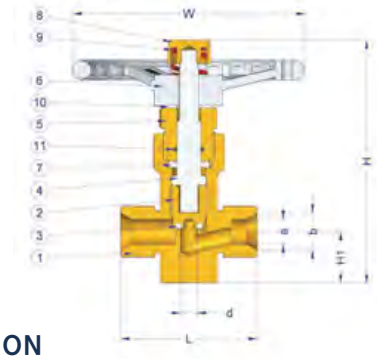

MATERIAL

NO	PART NAME	MATERIAL
1	BODY	C3771
2	DISC	C3604
3	DISC SHEET	PCTFE
4	STEM	STS 304
5	NUT	C3604
6	HANDLE	AL
7	PACKING	TEFLON
8	HANDLE NUT	C3604
9	SPRING	STS 304
10	SLIDE PACKING	NYLON
11	O-RING	NBR

DIMENSION

SIZE	L	H	H1	d	a	b	W
15A	110	135	30.2	10	15	22	124
20A	145	163	35	14	20	30	158.5

SPECIFICATION

- Design Pressure : 250kg/㎠
- Design Temperature : −40℃ ~ +60℃
- Fluid : Gas O_2, N_2, Ar, CO_2, LNG, C_2H_4, H_2, He

CRYOGENIC BC ECONOMIZER
Model : U&S-EBM-S

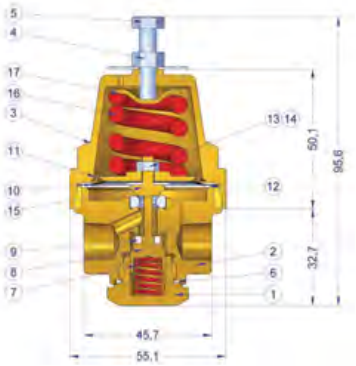

MATERIAL

NO	PART NAME	MATERIAL
1	CAPSULE	C3771
2	BODY	C3771
3	BONNET	C3771
4	LOCK NUT	STS 304
5	ADJUST SCREW	STS 304
6	SPRING	STS 304
7	DISC PACKING	PTFE
8	ORIFICE DISC	C3771
9	SOFT SEAT	STS 304

NO	PART NAME	MATERIAL
10	DIAPHRAGM	STS 304
11	DIAPHRAGM CUP	BRASS
12	DIAPHRAGM SHEET	C3771
13	WASHER	STS 304
14	HEXAGON NUT	STS 304
15	SEAT BOLT	STS 304
16	SPRING	STS 304
17	SPRING CUP	C3771

SPECIFICATION

- Delivery pressure Range : 25psi(outlet), 250psi(inlet)
- Fluid : Liquid, Gas O_2, N_2, Ar, CO_2
- Maximum Initial Pressure : 400psi

EXTENDED STEM CRYOGENIC VALVE
Model : U&S-CEBS-S.W / U&S-CEBL-S.W

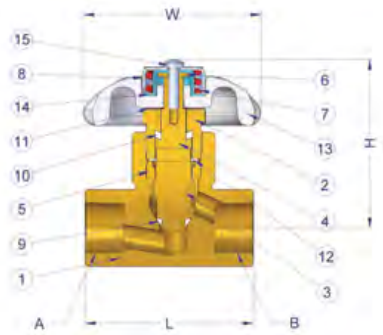

MATERIAL

NO	PART NAME	MATERIAL
1	BODY	C3771
2	BONNEET	C3604
3	VALVE DISC	C3604
4	STEM	C3604
5	SCREW BUSH	C3604
6	WASHER	C3604
7	SPRING CAP	STS 304
8	SPRING	STS 304

NO	PART NAME	MATERIAL
9	VALVE SEAT	PCTFE
10	PACKING RING	PTFE
11	BEARING SEAT	PTFE
12	GASKET	C1100P
13	HAND WHEEL	ALDC8
14	WATER COVER	RESIN
15	BOLT/W	STS 304

DIMENSION

SIZE	TYPE	L	H	W	A	B
10A	CEBS-W	65	75	70	ø17.5	PT 3/8"
	CEBS-S	65	75	70	PT 3/8"	PT 3/8"
	CEBL-W	65	96	70	ø17.5	PT 3/8"
	CEBL-S	65	96	70	PT 3/8"	PT 3/8"

SIZE	TYPE	L	H	W	A	B
15A	CEBS-W	65	75	70	ø22	PT 1/2"
	CEBS-S	65	75	70	PT 1/2"	PT 1/2"
	CEBL-W	65	96	70	ø22	PT 1/2"
	CEBL-S	65	96	70	PT 1/2"	PT 1/2"

SPECIFICATION

- Hydrostatic test pressure : 60kg/㎠
- Pneumatic test pressure : 44kg/㎠
- Fluid : Liquid, Gas O_2, N_2, Ar, CO_2
- Design Pressure : 40kg/㎠
- Design Temperature : −196℃ ~ +60℃

VACUUM VALVE
Model : U&S-VSV-F

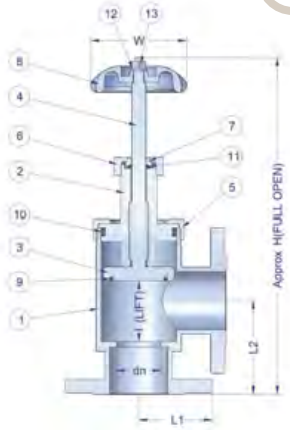

MATERIAL

NO	PART NAME	MATERIAL
1	BODY	STS 304
2	BONNET	C3604
3	VALVE DISC	STS 304
4	STEM	STS 304
5	UNION NUT	C3604
6	GLAND NUT	C3604
7	GLAND	C3604

NO	PART NAME	MATERIAL
8	HANDLE	ALDC 8
9	O-RING	NBR
10	O-RING	NBR
11	O-RING	NBR
12	SPRING WASHER	STS 304
13	HEX NUT	STS 304

DIMENSION

SIZE	dn	l	H	W	L1	L2
25A	21	24	201	80	55	57
40A	32	39	250	80	60	69

SPECIFICATION

- Application : Cryogenic Storage Tank
- O_2, N_2, Ar, CO_2 , NG, C_2H_4

AUTO CHANGER
Model : U&S-AAH / U&S-AAM-F

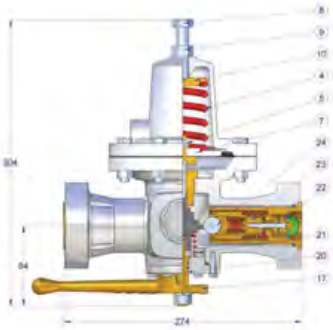

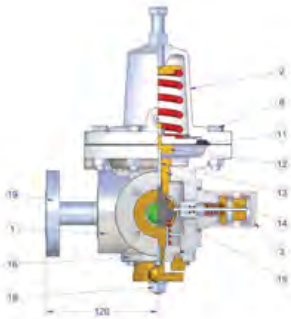

MATERIAL

NO	PART NAME	MATERIAL
1	BODY	A6061
2	COVER	AC2A-F
3	INDICATE INSTRUMENT	C3771
4	COURT SPRING	SUP4
5	NUT	SS400
6	BOLT	SS400
7	SAFEGUARD BOARD	C3771
8	LOCK BOLT	STS 304
9	LOCK NUT	STS 304
10	SPRING PRESS	C3771
11	DIAPHRAGM	C3771
12	CAM SHAFT	C3771

NO	PART NAME	MATERIAL
13	CAM SHAFT PIN	STS 304
14	GUIDE CUP	C3771
15	CONVERT CAM	SM45C
16	CAPSURE FLANGE	C3771
17	HANDLE	C3771
18	HANDLE NUT	STS 304
19	INLET FLANGE	AL 6061
20	SPINDLE	C3771
21	SPRING	SUP 4
22	SEAT-A	NBR / C3771
23	SEAT-B	NBR / C3771
24	CAM SHAFT	S45C

SPECIFICATION

- Inlet pressure : 25kg/㎠
- Fluid : Gas O_2, N_2, Ar, CO_2, LPG, C_2H_4
- Change set pressure AAH : 2~15kg/㎠
  AAM : 0.4~3kg/㎠

LPG GLOVE VALVE 20kg/㎠ FLANGE TYPE
Model : U&S-LGS-F

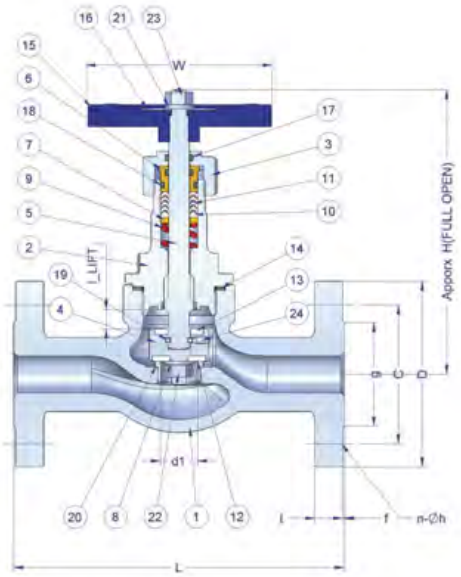

MATERIAL

NO	PART NAME	MATERIAL
1	BODY	GCD-S
2	BONNET	GCD-S
3	GLAND NUT	SS41
4	VALVE DISC	SS41
5	STEM	STS 304
6	GLAND	C3604
7	PACKING WASHER	C3604
8	SEAT RING	STS 304TP
9	SPRING	STS 304WR
10	LOWER PACKING	PTFE
11	UPPER PACKING	PTFE
12	VALVE SEAT	PTFE

NO	PART NAME	MATERIAL
13	BACK SEAT	PTFE
14	GASKET	ASBESTOS
15	HANDLE	ALDC 8
16	NAME PLATE	A 1100P
17	O-RING	NBR
18	O-RING	NBR
19	BALL	STB 2
20	FALT WASHER	STS 304
21	SPRING WASHER	STS 304
22	NYLON NUT	S10C
23	HEX NUT	S10C
24	STOP SCREW	STS 304

DIMENSION

SIZE	d1	L	g	C	D	t	f	n-øh	l	H	W
15A	15	152	51	70	95	13	1	4-15	9.5	153	80
20A	20	178	56	75	100	15	1	4-15	10.5	164	100
25A	25	203	67	90	125	15	1	4-19	12	186	100
40A	40	229	81	105	140	16	2	4-19	17	221	140
50A	50	267	96	120	155	16	2	8-19	19.5	243	160

SPECIFICATION

- Hydrostatic test pressure : 27kg/㎠
- Pneumatic test pressure : 20kg/㎠
- Fluid : LPG, NG
- Design Pressure : 18kg/㎠

※Remark 1. Please contact us when applying for other gases
※참고 1. 다른가스용도로 사용할 경우 당사로 연락바람.

LPG STRAINER 20kg/㎠ FLANGE TYPE
Model : U&S-LGT-F

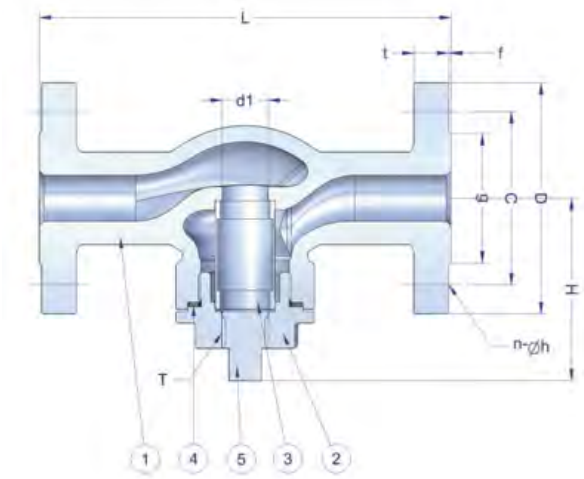

MATERIAL

NO	PART NAME	MATERIAL
1	BODY	GCD-S
2	BONNET	GCD-S
3	SCREEN	STS 304

NO	PART NAME	MATERIAL
4	GASKET	ASBESTOS
5	PLUG BOLT	SF 45

DIMENSION

SIZE	d1	L	g	C	D	t	f	n-øh	H	T
15A	15	152	51	70	95	13	1	4-15	72	PT 3/8 "
20A	20	178	56	75	100	15	1	4-15	76	PT 3/8 "
25A	25	203	67	90	125	15	1	4-19	89	PT 3/8 "
40A	40	229	81	105	140	16	2	4-19	109	PT 1/2 "
50A	50	267	96	120	155	16	2	8-19	119	PT 1/2 "

SPECIFICATION

- Hydrostatic test pressure : 27kg/㎠
- Pneumatic test pressure : 20kg/㎠
- Screen size : 60mesh
- Design Pressure : 18kg/㎠
- Fluid : LPG, NG

※Remark 1. Please contact us when applying for other gases
※참고 1. 다른가스용도로 사용할 경우 당사로 연락바람.

LPG CHECK VALVE 20kg/㎠ FLANGE TYPE
Model : U&S-LGC-F

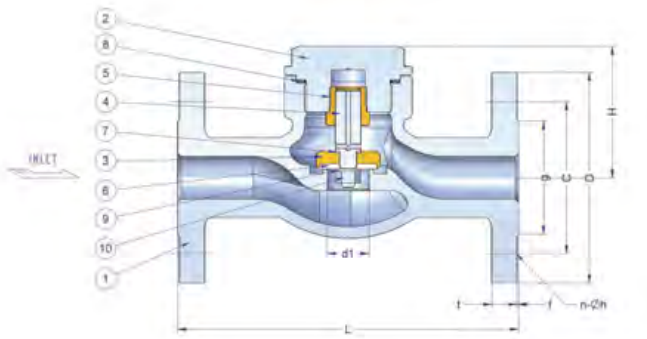

MATERIAL

NO	PART NAME	MATERIAL
1	BODY	GCD-S
2	BONNET	GCD 400
3	VALVE DISC	STS 304
4	STEM	STS 304
5	GUIDE	C3604

NO	PART NAME	MATERIAL
6	VALVE SEAT	PTFE
7	BACK SEAT	PTFE
8	GASKET	T#1100
9	FLAT MASHER	STS 304
10	NYLON NUT	S10C

DIMENSION

SIZE	d1	L	g	C	D	t	f	n-øh	H
25A	25	203	67	90	125	15	1	4-15	78
40A	40	229	81	105	140	16	2	4-19	94
50A	50	267	96	120	155	16	2	4-19	104

SPECIFICATION

- Hydrostatic test pressure : 27kg/㎠
- Pneumatic test pressure : 20kg/㎠
- Fluid : LPG, NG
- Design Pressure : 18kg/㎠

※Remark 1. Please contact us when applying for other gases
※참고 1. 다른가스용도로 사용할 경우 당사로 연락바람.

LPG EMERGENCY SHUT-OFF VALVE 20kg/㎠ FLANGE TYPE
Model : U&S-LCE-F

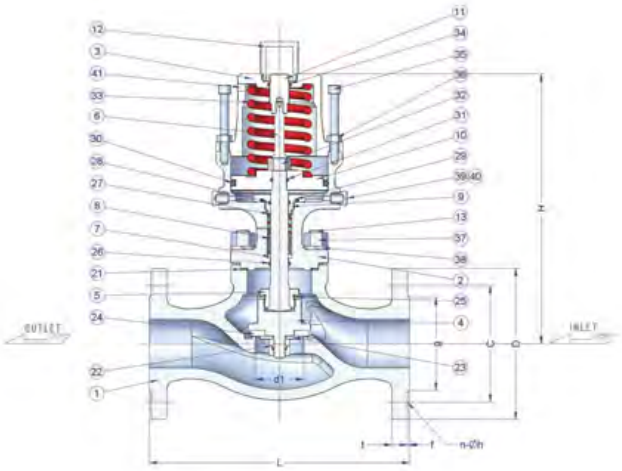

MATERIAL

NO	PART NAME	MATERIAL
1	BODY	SCPH2
2	BONNET	SCS 13A
3	CYLINDER CAP	AC4C
4	VALVE DISC	S20C
5	STEM LOCK NUT	STS 304
6	STEM	STS 304
7	V-PACKING ADAPTOR	PTFE
8	V-PACKING	PTFE
9	GLAND	C3604
10	PISTON	A6061
11	ON-OFF INDICATOR	A6061
12	SIGHT GLASS	ACRYL
13	STUD BOLT	STS304
21	GASKET	ASBESTOS
22	LOCK NUT	S45C
23	WASHER	STS304
24	SOFT SEAT	PTFE

NO	PART NAME	MATERIAL
25	SET SCREW	STS 304
26	"O" RING	VITON
27	SPRING	STS 304
28	"O" RING	NBR
29	"O" RING	NBR
30	"O" RING	NBR
31	"O" RING	NBR
32	NYLON NUT	STS 304
33	SPRING	SUP 10
34	"O" RING	NBR
35	SOCKET BOLT	STS 304
36	HEX' NUT	STS 304
37	HEX' NUT	STS 304
38	SPRING WASHER	STS 304
39	FUSE METAL	C3604+Pb
40	SUCTION PLUG	C3604
41	EXHAUST PLUG	C3604

DIMENSION

SIZE	d1	L	g	C	D	t	f	n-øh	H
25A	25	225	70	90	125	15	1	4-ø19	226
50A	50	267	100	120	155	16	2	8-ø19	277

SPECIFICATION

- Hydrostatic test pressure : 27kg/㎠
- Pneumatic test pressure : 20kg/㎠
- Fluid : LPG, NG
- Design Pressure : 18kg/㎠
- Melting temperature of fuse Metal : 75℃

※Remark · Please contact us when applying for other gases
※참고 · 다른가스용도로 사용할 경우 당사로 연락바람.

참고자료

Reference data

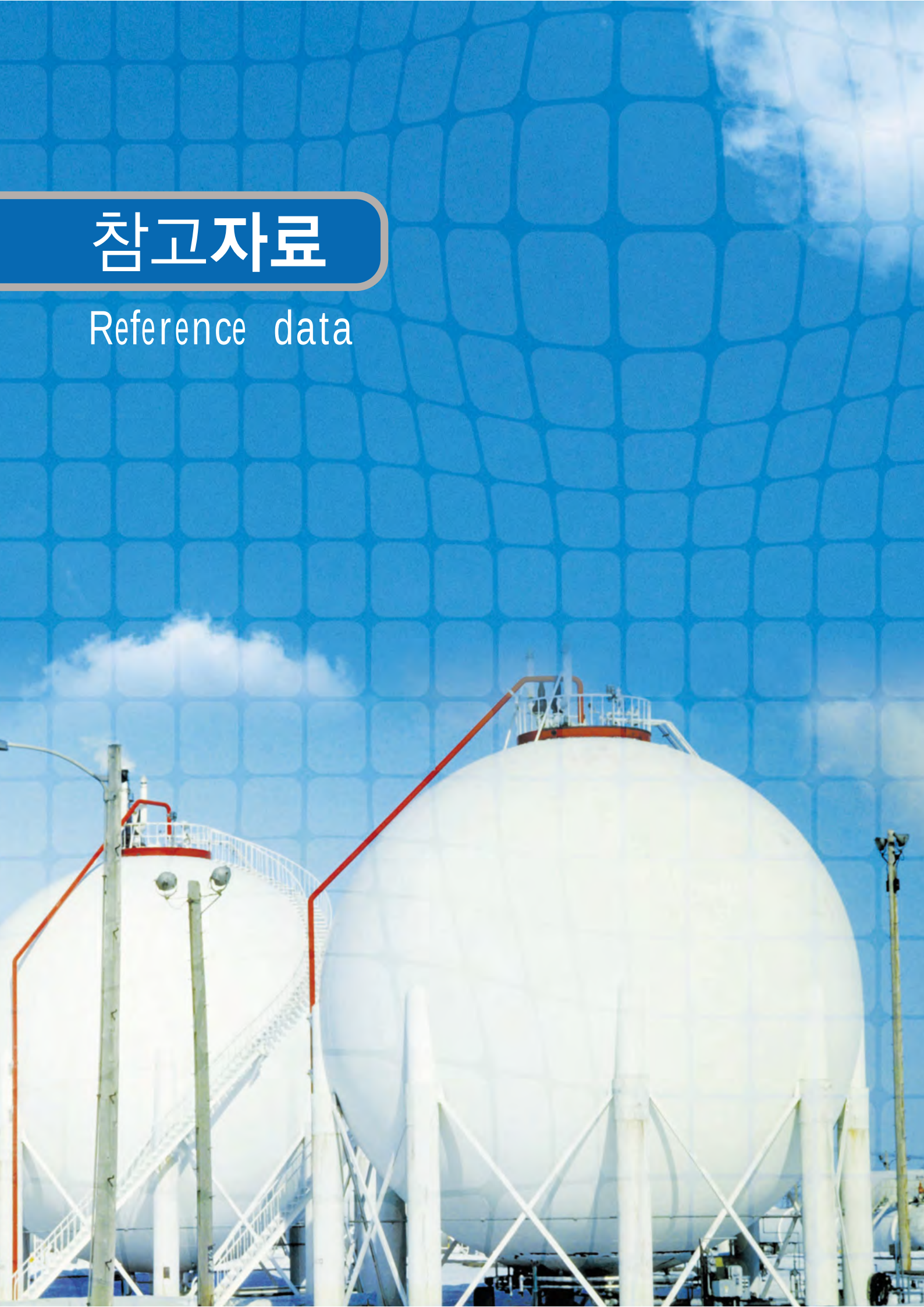

■주요가스의 특성

GAS		분자량	비 점	융 점	비 중	밀도(℃,1 atm)		허용농도	폭발한계	성 질
명 칭	화학기호	g/mole	1 atm ℃	1 atm ℃	Air = 1	GAS Kg/Nm³	Liquid Kg/L	PPM	%	
Acetylene	C_2H_2	26.04	-75	-81.5	0.906	1.171	0.519	—	2.5~100	가연성
Ammonia	NH_3	17.03	-33.35	-77.7	0.597	0.771	0.674	25	15~28	가연 · 독성
Argon	Ar	39.95	-185.8	-189.2	1.38	1.784	1.402	—	—	불연성
Arsine	AsH_3	77.95	-62.48	-113.5	2.695	3.48	1.604	0.05	0.8~98	가연 · 독성
Boron Trichloride	BCl_3	117.17	12.5	-107	1.43	—	—	—	—	—
Boron Trifluoride	BF_3	67.82	-100.3	-127.1	2.37	3.077	1.589	1	—	불연 · 독성
1,3 - Butadiene	C_4H_6	54.09	-4.41	-108.9	1.878	2.428	0.650	10	2.0~11.5	가연성
n-Butane	C_4H_{10}	58.12	-0.5	-138.3	2.076	2.68	0.599	800	1.8~8.4	가연성
1-Butene	C_4H_8	56.11	-6.26	-185.4	1.998	2.58	0.630	—	1.6~9.7	가연성
Carbon Dioxide	$C0_2$	44.01	-78.5	-56.6	1.521	1.977	1.031	5,000	—	불연성
Carbon Monoxide	C0	28.01	-191.5	-20.7	0.968	1.25	0.791	50	12.5~74	가연 · 독성
Carbon Tetrafluoride	CF_4	88.01	-127.9	-183.9	3.04	8.04	1.33	—	—	불연성
Chlorine	Cl_2	70.91	-34.0	-100.98	2.49	3.214	1.577	0.5	—	지연 · 독성
Cyclopropane	C_3H_6	42.08	-32.9	-127.6	1.45	1.88	0.680	—	2.4~10.4	가연성
Deuterium	D_2	4.032	-249.6	-254.4	0.14	0.18	0.163	—	4.9~75	가연성
Diborane	B_2H_6	27.67	-92.8	-164.9	0.95	1.22	0.470	0.1	0.8~98	가연 · 독성
Dichloro Silane	SiH_2Cl_2	101.01	-8.2	-122.0	3.94	4.94	1.261	0.5	4.1~98.8	가연 · 독성
Ethane	C_2H_6	30.07	-88.2	-183.3	1.047	1.35	0.546	—	3.0~12.5	가연성
Ethyl Chloride	C_2H_5Cl	64.52	12.27	-138.3	2.22	2.687	0.898	1000	3.8~15.4	가연 · 독성
Ethylene	C_4H_4	28.054	-103.7	-169.5	0.974	1.260	0.567	—	3.1~3.2	가연성
Fluorine	F_2	37.997	-188.14	-219.62	1.696	—	1.108	1	—	지연 · 독성
Germane	GeH_4	76.62	-90	-165	2.645	3.43	1.523	0.2	0.8~98	가연 · 독성
HaloCarbon 11	CCl_3F	137.7	23.77	111	5.04	5.85	1.464	1000	—	불연성
HaloCarbon 12	CCl_2F_2	120.9	-29.8	158	4.2	5.398	1.29	1000	—	불연성
HaloCarbon 13	$CClF_3$	104.47	-81.4	181	3.8	7.01	1.298	—	—	불연성
Helium	He	4.003	-268.9	-272.1	0.138	0.1785	0.125	—	—	불연성
Hydrogen	H_2	2.016	-252.9	-259.1	0.069	0.090	0.071	—	4.~75	가연성
Hydrogen Bromide	HBr	80.92	-66.8	-86	2.812	3.636	2.16	3	—	불연 · 독성
Hydrogen Chloride	HCl	36.46	-85.0	-114.2	1.268	1.639	1.192	5	—	불연 · 독성
Hydrogen Cyanide	HCN	27.03	25.7	-13.2	0.94	1.099	0.687	10	6.3~41	가연 · 독성
Hydrogen Selenide	H_2Se	80.98	-41.2	-64	2.80	3.615	2.004	0.05	—	가연 · 독성
Hydrogen Sulfide	H_2S	34.08	-60.3	-85.5	1.189	1.539	0.993	10	4.3~45	가연 · 독성
Isobutane	C_4H_{10}	58.12	-11.7	-159.6	2.04	2.64	0.594	600	1.8~8.4	가연성
Krypton	Kr	83.80	-153.6	-157.1	2.89	3.74	2.413	—	—	불연성
Methane	CH_4	16.04	-161.5	-182.5	0.555	0.717	0.426	—	5.3~14	가연성
Methyl Chloride	CH_3Cl	50.49	-24.22	-97.72	1.74	2.254	0.997	50	8.1~17.2	가연 · 독성
Neon	Ne	20.18	-246.1	-248.6	0.695	0.900	1.207	—	—	불연성
Nitric Oxide	NO	30.01	-151.7	-163.6	1.037	1.340	1.269	25	—	불연 · 독성
Nitrous Oxide	N_2O	44.01	-89.5	-90.8	1.530	1.977	1.266	—	—	지연성
Nitrogen	N_2	28.01	-195.8	-209.9	0.967	1.251	0.81	—	—	불연성
Nitrogen Dioxide	NO_2	46.01	21.15	-9.3	2.83	3.394	1.44	5	—	지연 · 독성
Oxygen	O_2	32.00	-183.0	-218.8	1.105	1.429	1.14	—	—	지연성
Phosgene	$COCl_2$	98.92	8.2	-128	3.4	0.52	1.435	0.1	—	불연성
Phosphine	PH_3	34.00	-87.74	-133	1.184	1.38	0.746	0.3	1.3~98	가연 · 독성
Propane	C_3H_8	44.10	-42.07	-187.7	1.523	—	0.58	1000	2.2~9.5	가연성
Silane	SiH_4	32.11	-112	-185	1.12	1.44	0.711	5	0.8~98	가연 · 독성
Silicon Tetrafluoride	SiF_4	104.08	-65	-95.7	3.57	4.67	—	—	—	불연성
Sulfur Hexafluroride	SF_6	146.05	-63.8	-50.8	5.11	—	1.540	1000	0.8~98	—
Xenon	Xe	131.3	-108.1	-111.8	4.53	5.887	3.053	—	—	불연성

■주요가스 환산표

Division GAS	Kg	ℓ	Nm^3	SM^3
산 소 (O_2)	1 1.14 1.429 1.267	0.877 1 1.253 1.111	0.700 0.798 1 0.886	0.790 0.900 1.128 1
질 소 (N_2)	1 0.81 1.251 1.109	1.238 1 1.544 1.372	0.800 0.648 1 0.886	0.902 0.729 1.128 1
알 곤 (Ar)	1 0.402 1.783 1.581	0.713 1 1.272 1.127	0.561 0.786 1 0.886	0.633 0.887 1.128 1
수 소 (H_2)	1 0.071 0.090 0.080	14.100 1 1.267 1.122	11.140 0.790 1 0.886	12.500 0.891 1.128 1
비 고			＊0℃ ＊1 atm	＊35℃ ＊1 atm

Division GAS	Kg	ℓ	Nm^3	SM^3
탄산가스 (CO_2)	1 1.031 1.977 1.752	0.971 1 1.919 1.701	0.506 0.521 1 0.886	0.571 0.588 1.128 1
아세틸렌 (C_2H_2)	1 1.171 1.110		 0.860 1 0.948	0.907 1.055 1
헬 륨 (He)	1 0.125 0.1785 0.1582	8.000 1 1.4285 1.2663	5.6000 0.7004 1 0.8863	6.3176 0.7897 1.1282 1
메 탄 (CH_2)	1 0.426 0.717 0.635	2.350 1 1.685 1.494	1.395 0.594 1 0.886	1.574 0.670 1.128 1
비 고			＊0℃ ＊1 atm	＊CO_2 & C_2H_2 15℃ , 1 atm ＊He & CH_4 35℃ , 1 atm

■가스용기 제원표

가스명칭	사용압력 kg/㎠	시험압력 kg/㎠	가스용적 SM^3	용기용적 Liter	도 색	비 고
산 소(O_2)	120	250	4.8 ＊기준온도 : 35℃	40.2	녹색	15℃~112.2kg/㎠
질 소(N_2)	120	250	"	"	회색	15℃~112.2kg/㎠
알 곤(Ar)	150	250	7.0 ＊기준온도 : 35℃	46.7	"	15℃~140.3kg/㎠
수 소(H_2)	120	250	4.8 ＊기준온도 : 35℃	40.2	적색	
의료용가스 (Medical O_2)	120	250	"	"	백색	
액체탄산가스 (Liquid CO_2)		250	22.5kg ＊기준온도 : 15℃	"	청색	
아세틸렌 (C_2H_2)	15.5	50	6.3 ＊기준온도 : 15℃	41	황색	
헬 륨(He)	120	250	5.6 ＊기준온도 : 35℃	46.7	회색	
혼합가스	120	250	4.8 ＊기준온도 : 35℃	40.2	대부분 회색	＊혼합가스 14종

철강제 관플랜지 기본치수

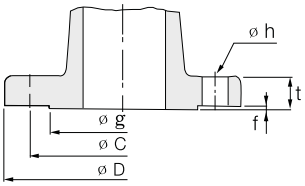

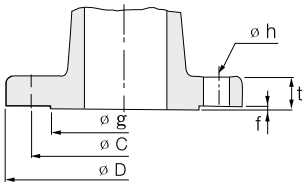

■10kgf/cm²관 플랜지

Unit : mm

호칭 지름	사용되는 강관의 외경	플랜지외경 D	플랜지 각부의 치수 t 강철관및 가단주철	t 주철	f	지름 g	보울트 구멍 중심부의 지름 C	수	지름 h	보울트 나사의 호 칭
10	17.3	90	12	14	1	48	65	4	15	M12
15	21.7	95	12	16	1	52	70	4	15	M12
20	27.2	100	14	18	1	58	75	4	15	M12
25	34.0	125	14	18	1	70	90	4	19	M16
32	42.7	135	16	20	2	80	100	4	19	M16
40	48.6	140	16	20	2	85	105	4	19	M16
50	60.5	155	16	20	2	100	120	4	19	M16
65	76.3	175	18	22	2	120	140	4	19	M16
80	89.1	185	18	22	2	130	150	8	19	M16
90	101.6	195	18	22	2	140	160	8	19	M16
100	114.3	210	18	24	2	155	175	8	19	M16
125	139.8	250	20	24	2	185	210	8	23	M20
150	165.2	280	22	26	2	215	240	8	23	M20
200	216.3	330	22	26	2	265	290	12	23	M20
250	267.4	400	24	30	2	325	355	12	25	M22
300	318.5	445	24	32	3	370	400	16	25	M22
350	355.6	490	26	34	3	415	445	16	25	M22
400	406.4	560	28	36	3	475	510	16	27	M24
450	457.2	620	30	38	3	530	565	20	27	M24
500	508.0	675	30	40	3	585	620	20	27	M24

■20kgf/cm²관 플랜지

Unit : mm

호칭 지름	사용되는 강관의 외경	플랜지 각부의 치수 외경 D	t	f	지름 g	보울트 구멍 중심부의 지름 C	수	지름 h	보울트 나사의 호 칭
10	17.3	90	14	1	48	65	4	15	M12
15	21.7	95	14	1	52	70	4	15	M12
20	27.2	100	16	1	58	75	4	15	M12
25	34.0	125	16	1	70	90	4	19	M16
32	42.7	135	18	2	80	100	4	19	M16
40	48.6	140	18	2	85	105	4	19	M16
50	60.5	155	18	2	100	120	8	19	M16
65	76.3	175	20	2	120	140	8	19	M16
80	89.1	200	22	2	135	160	8	23	M20
90	101.6	210	24	2	145	170	8	23	M20
100	114.3	225	24	2	160	185	8	23	M20
125	139.8	270	26	2	195	225	8	25	M22
150	165.2	305	28	2	230	260	12	25	M22
200	216.3	350	30	2	275	305	12	25	M22
250	267.4	430	34	2	345	380	12	27	M24
300	318.5	480	36	3	395	430	16	27	M24
350	355.6	540	40	3	440	480	16	33	M30
400	406.4	605	46	3	495	540	16	33	M30
450	457.2	675	48	3	560	605	20	33	M30
500	508.0	730	50	3	615	660	20	33	M30

■30kgf/cm²관 플랜지

Unit : mm

호칭 지름	사용되는 강관의 외경	플랜지 각부의 치수 외경 D	t	f	지름 g	보울트 구멍 중심부의 지름 C	수	지름 h	보울트 나사의 호 칭
10	17.3	110	16	1	52	75	4	19	M16
15	21.7	115	18	1	55	80	4	19	M16
20	27.2	120	18	1	60	85	4	19	M16
25	34.0	130	20	1	70	95	4	19	M16
32	42.7	140	22	2	80	105	4	19	M16
40	48.6	160	22	2	90	120	4	23	M20
50	60.5	165	22	2	105	130	8	23	M16
65	76.3	200	26	2	130	160	8	23	M16
80	89.1	210	28	2	140	170	8	23	M20
90	101.6	230	30	2	150	185	8	25	M22
100	114.3	240	32	2	160	195	8	25	M22
125	139.8	275	36	2	195	230	8	25	M22
150	165.2	325	38	2	235	275	12	27	M24
200	216.3	370	42	2	280	320	12	27	M24
250	267.4	450	48	2	345	390	12	33	M30
300	318.5	515	52	3	405	450	16	33	M30
350	355.6	560	54	3	450	495	16	33	M30
400	406.4	630	60	3	510	560	16	33	M30

■관 플랜지의 치수 허용차

플랜지부분	표면상태	치수구분	허용차
바깥지름 D	다 듬 질	3000이하	$^{+1}_{0}$
		300초과 6000이하	$^{+1.5}_{0}$
		300초과 1,0000이하	$^{+2}_{0}$
		1,000초과 1,5000이하	$^{+2.5}_{0}$
		1,500초과 하는 것	$^{+3}_{0}$
안지름 d	흑 피	160이하	±1
		16초과 630이하	±1.5
		63초과 1250이하	±2
		125초과 2500이하	±2.5
		250초과 5000이하	±3
		500초과 1,0000이하	±4
		1,000초과 하는 것	±5
보울트 구 멍	중심원의 지름C	2500이하	±0.5
		250초과 5500이하	±0.6
		550초과 9500이하	±0.8
		950초과 1,3500이하	±1
가스킷자리 f	다듬질	80이하	±0.2
두께 t	한쪽면 다듬질	200이하	$^{+1.5}_{0}$
		20초과 500이하	$^{+2}_{0}$
		50초과 1000이하	$^{+3}_{0}$

ANSI 관 플랜지 기본치수

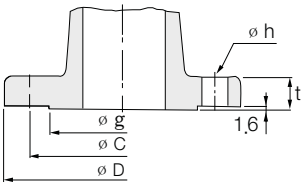

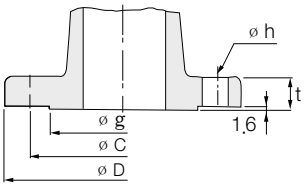

■ANSI CLASS 150

Unit : mm

호칭 지름	플랜지외경 D	두 께 t	가스킷의 지름 g	보울트 구멍			보울트 나사의 호 칭
				중심부의 지름 C	수	지름 h	
1/2	3.50(89)	0.44(11.2)	1.38(35)	2.38(60.5)	4	0.62(16)	1/2
3/4	3.88(98)	0.50(12.7)	1.69(43)	2.75(70.0)	4	0.62(16)	1/2
1	4.25(108)	0.56(14.3)	2.00(51)	3.12(79.5)	4	0.62(16)	1/2
11/4	4.62(117)	0.62(15.9)	2.50(64)	3.50(89.0)	4	0.62(16)	1/2
11/2	5.00(127)	0.69(17.5)	2.88(73)	3.88(98.5)	4	0.62(16)	1/2
2	6.00(152)	0.75(19.1)	3.62(92)	4.75(120.5)	4	0.75(19)	5/8
21/2	7.00(178)	0.88(22.3)	4.12(105)	5.50(139.5)	4	0.75(19)	5/8
3	7.50(191)	0.94(23.9)	5.00(127)	6.00(152.5)	4	0.75(19)	5/8
31/2	8.50(216)	0.94(23.9)	5.50(140)	7.00(178.0)	8	0.75(19)	5/8
4	9.00(229)	0.94(23.9)	6.19(157)	7.50(190.5)	8	0.75(19)	5/8
5	10.00(254)	0.94(23.9)	7.31(186)	8.50(216.0)	8	0.88(22)	3/4
6	11.00(279)	1.00(25.4)	8.50(216)	9.50(241.5)	8	0.88(22)	3/4
8	13.50(343)	1.12(28.6)	10.62(270)	11.75(298.5)	8	0.88(22)	3/4
10	16.00(406)	1.19(30.2)	12.75(324)	14.25(362.0)	12	1.00(25)	7/8
12	19.00(483)	1.25(31.8)	15.00(381)	17.00(432.0)	12	1.00(25)	7/8
14	21.00(533)	1.38(35.0)	16.25(413)	18.75(476.0)	12	1.12(29)	1
16	23.50(597)	1.44(36.6)	18.50(470)	21.25(539.5)	16	1.12(29)	1

■ANSI CLASS 300

Unit : r

호칭 지름	플랜지외경 D	두 께 t	가스킷의 지름 g	보울트 구멍			보울트 나사의 호 칭
				중심부의 지름 C	수	지름 h	
1/2	3.75(95)	0.56(14.3)	1.38(35)	2.62(66.5)	4	0.62(16)	1/2
3/4	4.62(117)	0.62(15.9)	1.69(43)	3.25(82.5)	4	0.75(19)	5/8
1	4.88(124)	0.69(17.5)	2.00(51)	3.50(89.0)	4	0.75(19)	5/8
11/4	5.25(133)	0.75(19.1)	2.50(64)	3.88(98.5)	4	0.75(19)	5/8
11/2	6.12(156)	0.81(20.7)	2.88(73)	4.50(114.5)	4	0.88(22)	3/4
2	6.50(165)	0.88(22.3)	3.62(92)	5.00(127.0)	8	0.75(19)	5/8
21/2	7.50(191)	1.00(25.4)	4.12(105)	5.88(149.0)	8	0.88(22)	3/4
3	8.25(210)	1.12(28.6)	5.00(127)	6.02(168.5)	8	0.88(22)	3/4
31/2	9.00(229)	1.19(30.2)	5.50(140)	7.25(184.0)	8	0.88(22)	3/4
4	10.00(254)	1.25(31.8)	6.19(157)	7.88(200.0)	8	0.88(22)	3/4
5	11.00(279)	1.38(35.0)	7.31(186)	9.25(235.0)	8	0.88(22)	3/4
6	12.50(318)	1.44(36.6)	8.50(216)	10.62(270.2)	12	0.88(22)	3/4
8	15.00(381)	1.62(41.3)	10.62(270)	13.00(330.0)	12	1.00(25)	7/8
10	17.50(445)	1.88(47.7)	12.75(324)	15.25(387.5)	16	1.12(29)	1
12	20.50(521)	2.00(50.8)	15.00(381)	17.75(451.0)	16	1.25(32)	1 1/8
14	23.00(584)	2.12(54.0)	16.25(413)	20.25(514.5)	20	1.25(32)	1 1/8
16	25.50(648)	2.25(57.2)	18.50(470)	22.50(571.5)	20	1.38(35)	1 1/4

■ANSI CLASS 600

Unit : mm

호칭 지름	플랜지외경 D	두 께 t	가스킷의 지름 g	보울트 구멍			보울트 나사의 호 칭
				중심부의 지름 C	수	지름 h	
1/2	3.74(95)	0.63(15.9)	1.50(38.1)	2.626(66.7)	4	0.394(10)	1/2
3/4	4.606(117)	0.63(15.9)	1.87(47.6)	3.248(82.5)	4	0.787(20)	5/8
1	4.882(124)	0.69(17.5)	2.13(54.0)	3.500(88.9)	4	0.787(20)	5/8
11/4	5.236(133)	0.81(20.6)	2.52(63.9)	3.874(98.4)	4	0.787(20)	5/8
11/2	6.142(156)	0.87(22.2)	2.75(69.8)	4.50(114.3)	4	0.906(23)	3/4
2	6.496(165)	1.13(28.6)	3.31(84.1)	5.0(127.0)	8	0.787(20)	5/8
21/2	7.52(191)	1.25(31.7)	3.94(100.0)	5.874(149.2)	8	0.906(23)	3/4
3	8.268(210)	1.37(34.9)	4.63(117.5)	6.626(168.3)	8	0.906(23)	3/4
31/2	9.016(229)	1.56(39.7)	5.25(133.3)	7.248(184.1)	8	1.024(26)	7/8
4	10.75(273)	1.63(41.3)	6.00(152.4)	8.5(215.9)	8	1.024(26)	7/8
5	12.99(330)	1.87(47.6)	7.44(188.9)	10.5(266.7)	8	1.142(29)	1
6	14.02(356)	1.99(50.5)	8.75(222.2)	11.5(292.1)	12	1.142(29)	1
8	16.5(419)	2.25(57.1)	10.7(273.0)	13.748(349.2)	12	1.260(32)	1 1/8
10	20.08(510)	2.56(65.1)	13.5(342.9)	17.00(431.8)	16	1.378(35)	1 1/4
12	22.05(560)	2.74(69.6)	15.7(400.0)	19.248(488.9)	20	1.378(35)	1 1/4
14	23.82(605)	2.87(73.0)	17.0(413.8)	20.748(527.0)	20	1.535(39)	1 3/8
16	26.97(685)	3.06(77.8)	19.5(495.2)	23.748(603.2)	20	1.654(42)	1 1/2

■ANSI CLASS 900

Unit : r

호칭 지름	플랜지외경 D	두 께 t	가스킷의 지름 g	보울트 구멍			보울트 나사의 호 칭
				중심부의 지름 C	수	지름 h	
1/2	4.764(121)	0.87(22.2)	1.50(38.1)	3.248(82.5)	4	0.906(23)	3/4
3/4	5.118(130)	1.00(25.4)	1.75(44.4)	3.500(88.9)	4	0.906(23)	3/4
1	5.866(149)	1.13(28.6)	2.06(52.4)	4.000(101.6)	4	1.024(26)	7/8
11/4	6.260(159)	1.19(30.2)	2.50(63.5)	4.374(111.1)	4	1.024(26)	7/8
11/2	7.008(178)	1.25(31.7)	2.75(69.8)	4.874(123.8)	4	1.142(29)	1
2	8.504(216)	1.50(38.1)	4.13(104.8)	6.500(165.1)	8	1.024(26)	7/8
21/2	9.606(244)	1.87(47.6)	4.87(123.8)	7.500(190.5)	8	1.142(29)	1
3	9.488(241)	1.65(41.8)	4.80(122.0)	7.500(190.5)	8	1.024(26)	7/8
31/2	11.50(292)	1.88(47.8)	6.25(158.7)	9.248(234.9)	8	1.260(32)	1 1/8
4	13.74(349)	2.13(54.0)	7.50(190.5)	11.000(279.4)	8	1.378(35)	1 1/4
5	15.00(381)	2.25(57.1)	9.25(234.9)	12.496(317.4)	12	1.260(32)	1 1/8
6	18.50(470)	2.50(63.5)	11.7(298.4)	15.500(393.7)	12	1.535(39)	1 3/8
8	21.46(545)	2.81(71.4)	10.6(268.3)	18.500(469.9)	16	1.535(39)	1 3/8
10	24.02(610)	3.00(76.2)	16.5(419.1)	21.000(533.4)	20	1.535(39)	1 3/8
12	25.20(640)	3.25(82.5)	17.7(450.8)	22.000(558.8)	20	1.654(42)	1 1/2
14	27.76(705)	3.37(85.7)	20.0(508.0)	24.248(615.9)	20	1.772(45)	1 5/8
16	3091(785)	3.50(88.9)	22.2(565.1)	27.000(685.8)	20	2.008(51)	1 7/8

■ 길이 (주:0.6452는 0.0006452를 표시한다.)

cm	m	in	ft	yd	mild	km	미터법해리(海里)
1	0.01	0.3937	0.03281	0.01094	1	1.6093	0.8690
100	1	39.37	3.281	1.0934	0.6214	1	0.5400
2.540	0.0254	1	0.08333	0.02778	1.151	1.852	1
3048	0.3048	12	1	0.3333			
9114	0.9144	36	3	1			

■ 체적 및 두량(斗量)

m^3	in^3	ft^3	yd^3	영국갈론	미국갈론	in	리터
1	61024	35.31	1.308	1	1.201	277.4	4.546
$0.0_4 1639$	1	$0.0_3 5787$	$0.0_2 2143$	0.8327	1	230	3.785
0.02832	1728	1	0.037037	$0.0_2 3605$	$0.0_2 4329$	1	0.01639
0.76455	46656	27	1	0.220	0.2643	61.02	1

■ 질량

킬로그램	그레인	온스(상용)	파운드(상용)	톤		
				미터법	영국톤	미국톤
1	15432	25.27	2.205	0.001	$0.0_3 9842$	$0.0_2 1102$
0.046480	1	$0.0_2 2286$	$0.0_3 1429$	$0.0_7 6480$	$0.0_7 6378$	$0.0_7 7143$
0.02835	437.5	1	0.0625	$0.0_4 2835$	$0.0_4 2790$	$0.0_4 3125$
0.4536	7000	16	1	$0.0_3 4536$	$0.0_3 4464$	0.005
1000	1.543×10^7	35274	2205	1	0.9842	1.102
1016	1.568×10^7	35840	2240	1.016	1	1.12
907.2	1.4×10^7	32000	2000	0.9072	0.929	1

■ 밀도

g/cm^3	lb/in^3	lb/ft^3	영t/yd^3	lb/영국갈론	lb/미국갈론
1	0.03613	62.43	0.7525	10.02	8.345
27.68	1	1728	20.83	277.4	231
1.01602	$0.0_3 5787$	1	0.01205	0.1605	0.1337
1.329	0.04801	82.96	1	13.32	11.09
0.998	0.003605	6.229	0.07508	1	1.201
0.1198	0.004329	7.481	0.09017	0.8327	1

■ 일, 에너지 및 열량

J	kg·m	ft·lb	kWh	불마력시(미터법)	영국마력시	kcal
1	0.10197	0.7376	$0.0_6 2778$	$0.0_6 3777$	$0.0_6 3724$	$0.0_3 2389$
9.807	1	7.2333	$0.0_5 2725$	$0.0_5 3704$	$0.0_5 3652$	0.002343
1.356	0.1383	1	$0.0_6 3766$	$0.0_6 5121$	$0.0_6 5049$	$0.0_3 3239$
3.6×10^4	3.671×10^4	2.655×10^4	1	1.3596	1.3405	860.0
2.648×10^4	7.700×10^4	1.953×10^4	0.7335	1	0.9859	632.5
2.646×10^4	2.739×10^4	1.981×10^4	0.746	1.143	1	641.6
4186	426.9	3087	0.001163	1.001581	0.001559	1

■ 면적

m^2	in^2	ft^2	yd^2	에이커	평방마일	헥타아르	km^2
1	1550	10.764	1.308	1	0.021563	0.4047	$0.0_2 4047$
$0.0_3 6452$	1	$0.6_2 944$	$0.0_2 7716$	640	1	259.0	2.590
0.09290	144	1	0.037037	2.471	$0.0_2 3861$	1	0.01
0.8361	1294	27	1	247.1	0.3861	100	1

■ 힘

메가다인	중량킬로그램	중량파운드	중량 톤(영국)	파운드
1	1.0197	2.248	$0.0_2 1004$	72.33
0.9807	1	2.205	$0.0_3 9842$	70.93
0.448	0.4536	1	$0.0_3 4464$	32.17
996.4	1016	2240	1	72070
0.01383	0.01410	0.03108	$0.0_4 1388$	1

■ 압력

cm	m	in	기압표준	수은주		수주(水注)	
				m	in	m	ft
1	1.0197	14.50	0.9869	0.7501	29.53	10.197	33.48
0.9807	1	14.22	0.9678	0.7356	28.96	10.000	32.81
0.06895	0.07031	1	0.06805	0.06805	2.036	0.7031	2.307
1.0133	1.0332	14.70	1	1	29.92	10.33	33.90
1.332	1.3595	19.34	1.3158	1.3158	39.37	13.60	44.60
0.03386	0.03453	0.4912	0.03342	0.03342	1	0.3453	1.133
0.09806	0.10000	1.422	0.09678	0.09678	2.896	1	3.281
0.02989	0.03048	0.4335	0.02950	0.02950	0.8827	0.3048	1

■ 속도 및 각속도

m/s	km/h	놋트(미터법)	ft/s	mile/h	도/sec	회전/min	Red/sec
1	3.6	1.944	3.281	2.237	1	0.1667	0.01745
0.2778	1	0.5400	0.9113	0.6214			
0.5144	1.852	1	1.688	1.151	6	1	0.1047
0.3148	1.097	0.5925	1	0.6818			
0.447	1.609	0.8690	1.467	1	57.30	9.549	

■ 동력

PS	HP	kWh	kg·m	ft·lb	kcal/s	Btu/s
1	0.9859	0.7355	75	542.5	0.1757	0.6973
1.0143	1	0.746	76.07	550.2	0.1782	0.7072
1.3596	1.3405	1	101.97	737.6	0.2389	0.9480
0.01333	0.01315	0.009807	1	7.233	0.002343	0.009297
0.001843	0.001817	0.001356	0.1383	1	$0.0_3 3239$	0.001285
5.691	5.611	4.186	426.9	3087	1	3.968
1.434	1.414	1.055	107.6	778.0	0.2520	1